Georgia Department of Natural Resources
205 Butler Street, S.E., Suite 1162, Atlanta, Georgia 30334
Lonice C. Barrett, Commissioner
Environmental Protection Division
Harold F. Reheis, Director
404/656-2833

April 17, 2000

CERTIFIED MAIL
RETURN RECEIPT REQUESTED

Gregory V. Stanley, Colonel, U.S. Army
Director, Public Works
Headquarters, 3D Infantry Division (Mechanized) and Fort Stewart
Directorate of Public Works, Building 1137
Environmental Branch (ATTN: Melanie Little)
1550 Frank Cochran Drive
Fort Stewart, GA 31314-4927

RE: Corrective Action Plan (CAP) for the Former 724th Tanker Purging Station [Solid Waste Management Unit (SWMU) 26] dated January 2000; Fort Stewart; EPA ID No. GA9 210 020 872.

Dear Colonel Stanley:

The Hazardous Waste Management Branch of the Georgia Environmental Protection Division (GA EPD) is in receipt of correspondence (Stanley to Khaleghi) dated April 10, 2000 which contains Replacement Pages D-7, D-12 and D-15 to be inserted into our four (4) copies of the above-referenced document. Based upon our review, GA EPD tentatively approves the Corrective Action Plan for SWMU 26 dated January 2000, as amended by Replacement Pages D-7, D-12 and D-15. Please note that a final decision will be made by GA EPD pending the outcome of a forty-five day public comment period which is scheduled to occur this Summer when the Corrective Action Module (i.e., Section IV) and Appendix A of your Hazardous Waste Facility Permit #HW-045(S&T) are modified.

Should you have any questions concerning this correspondence, please contact Brent Rabon of my staff at (404)656-2833.

Sincerely,

Bruce Khaleghi, Unit Coordinator
Hazardous Waste Management Branch

c: Mr. Larry Rogers, GA EPD-Southeast Regional Office
File: Fort Stewart(R)
R:\BRENTR\STEWART\SWMU26\CAP2X.APP

DEPARTMENT OF THE ARMY
HEADQUARTERS, 3D INFANTRY DIVISION (MECHANIZED) AND FORT STEWART
DIRECTORATE OF PUBLIC WORKS
1550 FRANK COCHRAN DRIVE
FORT STEWART, GEORGIA 31314-4927

APR 10 2000

REPLY TO
ATTENTION OF

OFFICE OF THE DIRECTORATE

EXPRESS MAIL

Georgia Environmental Protection Division
Attention: Mr. Bruce Khaleghi
205 Butler Street, Southeast
Suite 1154
Atlanta, Georgia 30334

Dear Mr. Khaleghi:

Fort Stewart is pleased to submit four copies of the proposed replacement pages for the Revised Final Corrective Action Plan for the Former 724th Tanker Purging Station (SWMU 26) at Fort Stewart, Georgia, dated January 2000. These replacement pages address revisions to the system maintenance section of Appendix D, Operation and Maintenance Plan for the Former 724th Tanker Purging Station. Specifically, per discussions between Mr. Brent Rabon of your office and Ms. Melanie Little, this directorate, the approved weekly inspection has been modified to a bi-weekly inspection to better accommodate site visits and system operation. This change has resulted in revisions to pages D-7, D-12, and D-15, which have been included for your use and convenience.

In accordance with the Federal Code of Regulations, Section 270.11(d), the following certification is provided by the Installation:

> I certify under penalty of law that this document and all attachments were prepared under my direction or supervision in accordance with a system designed to assure that qualified personnel properly gather and evaluate the information submitted. Based on my inquiry of the person or persons who manage the system, or those persons directly responsible for gathering the information, the information is, to the best of my knowledge and belief, true, accurate, and complete. I am aware that there are significant penalties for submitting false information, including the possibility of fine and imprisonment for knowing violations.

Please contact Ms. Melanie Little or Ms. Tressa Rutland, Directorate of Public Works Environmental Branch, at (405) 364-8461 or (912) 767-7919, respectively, should questions arise regarding the enclosed documents.

Sincerely,

Thomas C. Fry 04/09/00
for Gregory V. Stanley
Colonel, U.S. Army
Director, Public Works

Enclosures

pressure, each globe valve will need a different level of adjustment. Once the flow rate at each well is within ±10 percent of the set flow rate, the system will be considered balanced.

4.2 ROUTINE OPERATING PROCEDURES

The current plan is to operate the PHOSter® II system using pulsed nutrient/air injection throughout the treatment period. Pulsed injection is a mode of operation whereby the airflow is turned off for some period of time and subsequently turned back on. In diffusion-limited soils, the concentrations will tend to rebound when the system is shut off. Pulsed injection may be more efficient than continuous operation in removing contaminant mass, particularly where the soil layers have higher clay or silt content. At the Former 724th TPS site, pulsed injection is planned over 4-hour cycles; air will be injected for 4 hours, then turned off for 4 hours, and subsequently turned back on. In groundwater, air will be injected alternately between two sets of three wells each over the 4-hour cycles.

System well head pressures will be balanced to provide approximately uniform air delivery to each of the six injection wells. Routine operations will involve bi-weekly operational checks of pressure and volumetric airflow rate. In addition, dissolved oxygen, nitrate, and orthophosphate field parameters will be measured in groundwater at monitoring wells MW-2 and MW-6. If the system is shut down at any time for maintenance or repair, then the system will be restarted following the startup procedures given in Section 2.1.

5.0 SYSTEM MAINTENANCE

5.1 BI-WEEKLY MAINTENANCE

Check the system bi-weekly (i.e., once every two weeks) for operation. This will be accomplished by inspecting the system for visible damage or power cutoff. Any equipment that is found to be faulty, out of adjustment, or in disrepair will be repaired or serviced. Pertinent manufacturer's information for the compressor will be attached to the O&M Plan once the equipment is selected for purchase or lease. Checks will include operation of the compressor system and well head pressures. The inspector will fill out a bi-weekly inspection checklist (similar to that contained in Attachment 1) and record the system operating parameters as measured at the time of inspection. The required bi-weekly inspection items are listed below.

- Air supply header and injection well head. Inspect both the air injection wells and piping for evidence of tampering or damage. Check all piping and connections for any signs of leaks and proper operation of pressure gauges, airflow meters, or globe valves.

- Compressor and air supply system. Inspect the compressor for signs of improper operation, such as abnormal noise levels, excessive vibration, or overheating.

- System balance. Check the airflow rates at each well head and balance the system if required following the procedures given in Section 2.1.

5.2 ROUTINE (QUARTERLY) MAINTENANCE

In addition to weekly inspections, the PHOSter® II system will be inspected quarterly for the following:

- Check nutrient/air injection wells for silt accumulation, clogging, or biofouling.
- Check monitoring wells for silt accumulation, tampering, or other surficial damage.
- Maintain compressor per the manufacturer's recommendations.
- Clear brush or vegetative growth from around wells and headers by mowing or scythe.

6.0 SAMPLING AND ANALYSIS

Sampling of soil and groundwater will be conducted throughout the remediation period to verify effective O&M of the corrective measure. All information, data, and resulting decisions will be technically sound, statistically valid, and properly documented by following a QAPjP. The QAPjP will document all monitoring procedures, sampling, field measurements, and sample analyses performed during these activities. Appropriate quality assurance, quality control, and chain-of-custody procedures will be followed in accordance with the U.S. Army Corps of Engineers' Requirements for the Preparation of Sampling and Analysis Plans (EM200-1-3), EPA's Requirements for Quality Assurance Project Plans for Environmental Data Operations (QA/R-5), and EPA's Interim Guidelines and Specifications for Preparing Quality Assurance Project Plans (QAMS-005/80). Detailed sampling and analysis procedures will be developed in conjunction with the Corrective Action Work Plan.

6.1 GROUNDWATER MONITORING DURING PHOSter® II SYSTEM OPERATION

The nine on-site groundwater monitoring wells will be sampled once every month during the PHOSter® II system operation, for a total predicted duration of 4 months. The purpose of this sampling will be to evaluate trends in system effectiveness and to compare the actual rate of remediation to the predicted rate.

Prior to sampling the monitoring wells, the nutrient/air injection system will be temporarily shut down for 1 day to allow equilibrium to be reached. A simplified respiration test will be run on one of the new monitoring wells (MW-6) during this shutdown time by monitoring dissolved oxygen (DO) and carbon dioxide concentrations in the well for approximately 8 hours. After 24 hours, groundwater samples will be collected from each of the eight wells using low-flow sampling techniques to minimize volatilization. Samples will be analyzed at an off-site laboratory for benzene, toluene, ethylbenzene, and total xylenes (BTEX). In addition, groundwater samples will be analyzed for natural attenuation parameters (nitrate/nitrite, sulfate/sulfide, total iron, total phosphorous, carbon dioxide, and methane) to confirm that conditions favorable for natural attenuation persist during PHOSter® II treatment. Field parameters will be measured at the time of sampling and will include DO, temperature, oxidation-reduction potential (Eh), conductivity, pH, and ferrous iron.

Due to the active nutrient/air injection and disturbance at each nutrient/air injection well, sampling of the injection wells is not required.

remediation. Contingency actions that may be considered are listed in the following troubleshooting guide (Table D-3).

Table D-3. Troubleshooting Guide for Operational Malfunctions

Problems	Considerations	Potential Solutions
The radius of influence of injection pressures is insufficient or not as predicted	The soil may be less permeable in some locations or there may be a preferential flow path	Further subsurface investigation Readjust flows Install additional wells Check wells for clogging Check for short-circuiting
Pressures vary between wells	There may be a preferential flow path or heterogeneities	Further subsurface investigation Install additional wells Rebalance globe valves
The benzene concentrations have reduced in some but not all wells	Treatment may be completed in some areas of the site	Reduce flows to some wells Take some wells off-line Check for ongoing sources of contamination
The benzene concentrations remain consistently high	Undiscovered source of contamination or free product may be present	Further investigation Restart free product recovery Reassess PHOSter® II system effectiveness
Benzene concentrations rebound when system is shut off	Air diffusion may be limited, short-circuiting may be occurring due to preferential flow, airflow rates may be higher than necessary	Reduce airflow rates Install additional wells Adjust rates of nutrient injection
Benzene concentrations decline but do not reach completion criteria	Operation of PHOSter® II system may be nearing point of diminishing returns	Extend injection period Shut off PHOSter® II system and continue with monitored natural attenuation
System breakdown or power interruption is frequent	Operating conditions may be erratic	Redundant or emergency backup equipment
Extent of groundwater contamination is greater than anticipated	Contamination may have migrated further than previously measured	Further subsurface investigation Readjust flows Install additional wells
Rate of remediation is slower than anticipated	Soil conditions may be less porous, heterogenous, or more layered than anticipated	Extend PHOSter® II treatment period Install additional wells Adjust rates of nutrient injection Shut off PHOSter® II system and continue with monitored natural attenuation

10.0 O&M SCHEDULE

The anticipated schedule for O&M is summarized in Table D-4.

Table D-4. Operations and Maintenance Schedule

O&M Activity	Frequency	Duration
System startup	Once	Until system balanced (~1 week)
Site inspection/bi-weekly maintenance	Bi-weekly (once every two weeks)	Bi-weekly throughout nutrient/air injection operations (~4 to 8 months)
Site inspection/quarterly maintenance	Quarterly	Quarterly throughout nutrient/air injection operations (~4 to 8 months)
Groundwater sampling during PHOSter® II system operation, BTEX, and natural attenuation parameters	Monthly	Monthly throughout nutrient/air injection operations (~4 to 8 months)
Soil vapor monitoring during PHOSter® II system operation (O_2, CO_2, benzene, total petroleum hydrocarbons)	Monthly	Monthly throughout nutrient/air injection operations (~4 to 8 months)
Soil sampling during PHOSter® II system operation (BTEX)	Once after 4 months of operation	One-time event
Confirmatory groundwater sampling	Quarterly following shutdown of PHOSter® II treatment system	Quarterly for 1 year
Confirmatory subsurface soil sampling	Once at the completion of confirmatory groundwater sampling	One-time event

11.0 DATA MANAGEMENT AND REPORTING DOCUMENTATION

A data management system will be maintained throughout the corrective action to accumulate, archive, and control project data. The data and operational information will be used to prepare Progress Reports and the final Corrective Action Completion Report. The types of data to be maintained in the data management system include those listed below.

- Monitoring and laboratory data. Sample location, date and time of collection, chain of custody, laboratory, test method, analytical results, detection limits, and associated quality control sample results.

- Records of operating parameters. Pressures, flow rates, temperatures, and other operating parameters recorded on inspection checklists.

- Personnel, maintenance, and inspection records. Logbooks, maintenance checklists, repairs, or system upgrades.

ATTACHMENT 1

BI-WEEKLY INSPECTION CHECKLIST
PHOSter® II SYSTEM OPERATION AND MAINTENANCE
FORMER 724th TANKER PURGING STATION
FORT STEWART, GEORGIA

Inspector:_____ **Date:**_____**Time:**_____
Unit No.:_____ **Unit Type:**_____

Operation Check:

System Settings		Process Control	
SV1	Pressure _____ Flow:_____	Well No.	DO_____ Nitrate_____ Orthophosphate_____
SV2	Pressure _____ Flow:_____	Well No.	DO_____ Nitrate_____ Orthophosphate_____
SV3	Pressure _____ Flow:_____	Well No.	DO_____ Nitrate_____ Orthophosphate_____
SV4	Pressure _____ Flow:_____	Well No.	DO_____ Nitrate_____ Orthophosphate_____
SV5	Pressure _____ Flow:_____	Well No.	DO_____ Nitrate_____ Orthophosphate_____
SV6	Pressure _____ Flow:_____	Well No.	DO_____ Nitrate_____ Orthophosphate_____

Chemicals

Triethylphosphate Added_____

Maintenance Check:

Injection wells show no visible damage/tampering:_____
Supply tubing shows no visible damage/tampering:_____
Supply tubing/connections show no visible leaks:_____
Pressure gauges are operating properly:_____
Flow meters are operating properly:_____
Compressor is operating properly (noise, vibration, overheating):_____
Flow rates at each well head are balanced:_____
Power service has not been uninterrupted:_____

Unit Maintenance Performed_____
_____
_____
_____

THIS PAGE INTENTIONALLY LEFT BLANK

Georgia Departme of Natural Resources
205 Butler Street, S.E., Suite 1162, Atlanta, Georgia 30334
Lonice C. Barrett, Commissioner
Environmental Protection Division
Harold F. Reheis, Director
404/656-2833

January 27, 2000

CERTIFIED MAIL
RETURN RECEIPT REQUESTED

Gregory Stanley, Colonel, U.S. Army
Director, Public Works
ATTN: AFZP-DEV (Melanie Little)
Department of the Army
Headquarters, 3D Infantry Division (Mechanized) and Fort Stewart
1557 Frank Cochran Drive
Fort Stewart, GA 31314-4928

RE: Corrective Action Plan (CAP) for the Former 724th Tanker Purging Station [Solid Waste Management Unit (SWMU) 26] dated January 2000; Fort Stewart; EPA ID No. GA9 210 020 872.

Dear Colonel Stanley:

The Hazardous Waste Management Branch of the Georgia Environmental Protection Division (GA EPD) has reviewed the above-referenced document and determined that Fort Stewart has sufficiently responded to our comments on the previous version of this CAP which are contained in correspondence (Khaleghi to Perez) dated December 8, 1999. Therefore, GA EPD tentatively approves the Corrective Action Plan for SWMU 26 dated January 2000. Please note that a final decision will be made by GA EPD pending the outcome of a forty-five day public comment period which is scheduled to occur this Spring when the Corrective Action Module (i.e., Section IV) and Appendix A of your Hazardous Waste Facility Permit #HW-045(S&T) are modified.

Should you have any questions concerning this correspondence, please contact Brent Rabon or Madeleine Kellam of my staff at (404)656-2833.

Sincerely,

Bruce Khaleghi

Bruce Khaleghi, Unit Coordinator
Hazardous Waste Management Branch

c: Mr. Larry Rogers, GA EPD-Southeast Regional Office
File: Fort Stewart(R)
R:\BRENTR\STEWART\SWMU26\CAP.APP

DEPARTMENT OF THE ARMY
HEADQU...ERS, 3D INFANTRY DIVISION (MECHANIZED) AN... ORT STEWART
DIRECTORATE OF PUBLIC WORKS
1557 FRANK COCHRAN DRIVE
FORT STEWART, GEORGIA 31314-4928

154

REPLY TO
ATTENTION OF

JAN 2 0 2000

Directorate of Public Works

CERTIFIED MAIL

Georgia Environmental Protection Division
Attention: Mr. Bruce Khaleghi
205 Butler Street, Southeast
Suite 1154
Atlanta, Georgia 30334

Dear Mr. Khaleghi:

Fort Stewart is pleased to receive the Georgia Environmental Protection Division's (GA EPD) correspondence dated December 8, 1999, in reference to the Corrective Action Plan for the Former 724th Tanker Purging Station (SWMU 26) at Fort Stewart, Georgia, dated July 1999; Fort Stewart; EPA ID No. GA9 210 020 872.

In response to the comments received from GA EPD, Fort Stewart has enclosed four copies of the Revised Final Corrective Action Plan for the Former 724th Tanker Purging Station (SWMU 26) at Fort Stewart, Georgia dated January 2000. Fort Stewart agrees to comply with the comments listed in the correspondence referenced above and a formal response to comments table is provided as an enclosure (i.e., within the front of each Revised Final Corrective Action Plan (CAP)).

In accordance with the Federal Code of Regulations, Section 270.11(d), the following certification is provided by the Installation:

> I certify under penalty of law that this document and all attachments were prepared under my direction or supervision in accordance with a system designed to assure that qualified personnel properly gather and evaluate the information submitted. Based on my inquiry of the person or persons who manage the system, or those persons directly responsible for gathering the information, the information is, to the best of my knowledge and belief, true, accurate, and complete. I am aware that there are significant penalties for submitting false information, including the possibility of fine and imprisonment for knowing violations.

Please contact Ms. Melanie Little or Ms. Tressa Rutland, Directorate of Public Works Environmental Branch, at (405) 364-8461 or (912) 767-7919, respectively, should questions arise regarding the response to comments and/or the Revised Final CAP Report.

Sincerely,

Thomas C. Fry 01/20/00
for Ovidio E. Perez
Colonel, U.S., Army
Director, Public Works

Enclosures

PCDR\PCDR4\HUNTER AF
\012808\HAF080084

REVISED FINAL

FORSCOM

CORRECTIVE ACTION PLAN

3d Inf Div (Mech)

FORMER 724th TANKER PURGING STATION (SWMU 26) AT FORT STEWART, GEORGIA

Prepared for

U.S. ARMY CORPS OF ENGINEERS
SAVANNAH DISTRICT

Contract No. DACA21-95-D-0022
Delivery Order 0034

January 2000

99-090P(PPT)/121699

5.0 CONCEPTUAL DESIGN AND IMPLEMENTATION PLAN

This section presents a conceptual design and plan for implementation of the selected corrective action alternative. Based on the available groundwater and soil data and modeling results, a cost-effective corrective action was selected that would reduce the COCs in groundwater and soil to the required RLs. The technology evaluation presented in Section 4.0 evaluated six different corrective action alternatives based on the time needed to implement and life-cycle cost. Based on that evaluation, Alternative 6, PHOSter® II Enhanced Bioremediation, was selected for its short implementation time and low cost.

5.1 SELECTED CORRECTIVE ACTION

The selected corrective action alternative involves in situ enhanced bioremediation using the patented PHOSter® II technology. The PHOSter® II system delivers air and nutrients to the subsurface at a controlled rate to promote biomass growth and increase degradation rates of contaminants. Nutrient delivery is accomplished through the vapor-phase addition of phosphorous, nitrogen, and air. Because the nutrients are delivered in the vapor phase, they are more readily available for use by microorganisms in their biodegradation of contaminants. The technology has been demonstrated to be effective in both soils and groundwater in reducing concentrations of BTEX and other fuel-related contaminants to nondetectable levels.

5.1.1 Justification of Selection

The PHOSter® II system has been selected because it will effectively achieve RLs in soil and groundwater in the shortest period of time and at moderately low cost. Although Monitored Natural Attenuation would be less costly, RLs would not be expected to be achieved in groundwater for nearly 19 years. The PHOSter® II system is expected to achieve RLs in as little as 4 months. Other corrective action alternatives, such as air sparging or pure oxygen injection, would provide a higher degree of reliability and less uncertainty in their effectiveness than the PHOSter® II system; however, they would probably cost more than the PHOSter® II system and would require a much longer time to achieve RLs. Justification for selection of this corrective action alternative is detailed in the following evaluations of effectiveness, implementability, and cost.

Effectiveness. The selected corrective action will be effective in protecting human health and the environment. Based on the conclusions of the Phase II RFI, there is no current human health or ecological risk associated with the contaminants at the Former 724th TPS. If no remediation was conducted, potential future risk might be associated with leaching of organic contaminants to groundwater and subsequent groundwater ingestion. This potential exposure is extremely unlikely because the shallow groundwater is not a viable source of drinking water in the Fort Stewart area. The selected alternative will achieve RLs within a relatively short time frame (4 months), thereby effectively eliminating any potential future risk. The selected alternative will not require long-term O&M beyond the 4-month treatment period and 1-year confirmatory sampling period; it therefore provides long-term reliability and no need for replacement of system components. Short-term risks to human health or the environment are minimal because treatment occurs in situ. There are no air emissions or surface water discharges associated with the selected corrective action. Potential exposure by remediation workers to contaminants is limited. Minimal exposure could result during well installation or trenching for installation of the injection lateral; any

exposure will be minimized and maintained below acceptable levels with the use of proper protective clothing, monitoring of airborne VOCs in the breathing zone, and strict adherence to the project health and safety plan.

The selected corrective action will be effective in controlling contaminants at the source and preventing any future releases. The vadose-zone soils will be treated in situ using the PHOSter® II bioventing system to degrade the COCs below their respective RLs, thereby eliminating any future release. The shallow groundwater will also be treated in situ using the PHOSter® II vapor-phase nutrient injection system to eliminate any future migration from the source. The time required to achieve RLs has been estimated using benzene as the primary COC and assuming a degradation half-life of 11 days. In soil, the time required to degrade benzene from a maximum of 9,040 μg/kg to its RL of 20 μg/kg has been estimated to require 98 days (3.2 months). In groundwater, the time required to degrade benzene from a maximum of 8,090 μg/L to its MCL of 5 μg/L has been estimated to require 117 days (4 months), which is nominally the same duration as required in soil. There is uncertainty regarding the actual time required for treatment because the PHOSter® II technology is innovative and relatively new. Full-scale demonstration projects in Georgia and South Carolina using the PHOSter® II system have shown the technology to be effective for fuel constituents in both soil and groundwater for similar levels of contamination. These case studies have also shown that a benzene half-life of between 4 and 11 days is achievable. Consequently, the reliability of the PHOSter® II system, while uncertain, is considered acceptable. Contingent actions are identified in the O&M Plan (Appendix D) to ensure that RLs will be met.

Because the vadose zone is relatively shallow (less than 6 feet) and because the native surficial soils are relatively sandy, conditions within the vadose zone may be sufficiently aerated to promote natural biodegradation of contaminants. In such case, in situ bioventing using the PHOSter® II system may be unnecessary. However, the selected corrective action includes bioventing for the following reasons: (1) the PHOSter® II mobile treatment unit will already be on the site for groundwater treatment and will be available for soil treatment at little additional cost, (2) soil vapor monitoring and respiration testing during installation of the injection lateral will be used to verify whether bioventing is necessary, and (3) bioventing could be suspended at any time during O&M of the system based on results of soil vapor monitoring and respiration testing.

Implementability. The selected corrective action can be readily implemented. Construction involves conventional drilling and trenching techniques for which numerous qualified construction contractors and equipment are readily available. The action will comply with RCRA waste management standards for sampling of any contaminated soil excavated during drilling or trenching and off-site disposal at a permitted landfill. The action will require an Underground Injection Control (UIC) permit be obtained from GEPD prior to operation; such a permit is readily obtainable for air injection. The action will also require a construction permit be obtained from the Installation prior to any below-ground drilling or trenching. Electrical power is available at the site.

The implementation schedule allows for initiating and completing the remedial activities within a reasonable period of time. The RLs will be achieved in the shortest period of time of any of the corrective action alternatives (4 months after start of O&M). The selected corrective action utilizes a relatively new technology to accelerate natural biodegradation processes and thereby accelerate remediation. Because of this, there is uncertainty whether RLs can be achieved so quickly; contingent actions are therefore identified in the O&M Plan (Appendix D) and in the

implementation schedule. The project implementation schedule is presented in detail in the conceptual design later in this section.

Cost. The estimated total life-cycle cost of construction, operation, maintenance, and confirmatory sampling for the selected corrective action is $579,000. Monitored natural attenuation is similar in cost ($578,000), but would require nearly 19 years to achieve RLs, compared to only 4 months for the selected PHOSter® II system. This significant savings in implementation schedule justifies the selected system. Costs estimated for the other corrective action alternatives were much higher than the selected PHOSter® II system, ranging from ($824,000 to $1,224,000).

5.2 CONCEPTUAL DESIGN

The conceptual design and cost estimate presented in this section for the Former 724th TPS are based on the subsurface stratigraphy information presented on the drilling logs, the most recent contaminant chemistry for the soil and groundwater, and SAIC's experience in designing similar remediation systems.

5.2.1 Decommissioning of Free Product Recovery System

Although operation of the Ferret® free product recovery system in MW-2 is ongoing, less than 0.02 foot of free product was encountered during the March 1999 sampling event, and little volume of product has been recovered. No free product had been encountered previously in any of the direct-push soil or groundwater probes completed during the Phase II RFI in July 1997. Therefore, operation of the Ferret® system will be discontinued when the nutrient/air injection wells are installed. Decommissioning of the free product recovery system will involve removal of the Ferret® system from MW-2 and decontamination of the equipment. If at any future date free product is discovered in a monitoring well or injection well, the Ferret® system will be reinstalled, as required.

5.2.2 Bioventing of Soils

The PHOSter® II bioventing system conceptual design is based on the results of published case studies provided by the system vendor, extrapolated to conditions at the Former 724th TPS site. Figure 5-1 indicates the location of the area that requires bioventing and the conceptual design layout. Figure 5-2 is a process flow schematic and shows the conceptual design components of the bioventing system.

Bioventing Conceptual Design Layout. The depth to the water table in the area of soil contamination is approximately 6 feet. Because of this shallow depth, vertical injection wells are not considered appropriate to address remediation of the remaining soil contamination due to the potential for short-circuiting of injected air and nutrients directly to the atmosphere and resulting limited radius of influence. A lateral injection line is therefore planned. The area of contaminated vadose-zone soil extends predominantly over an L-shaped area about 20 feet wide and 100 feet long. A 100-foot-long injection lateral running the length of this area of contamination is used for the conceptual design.

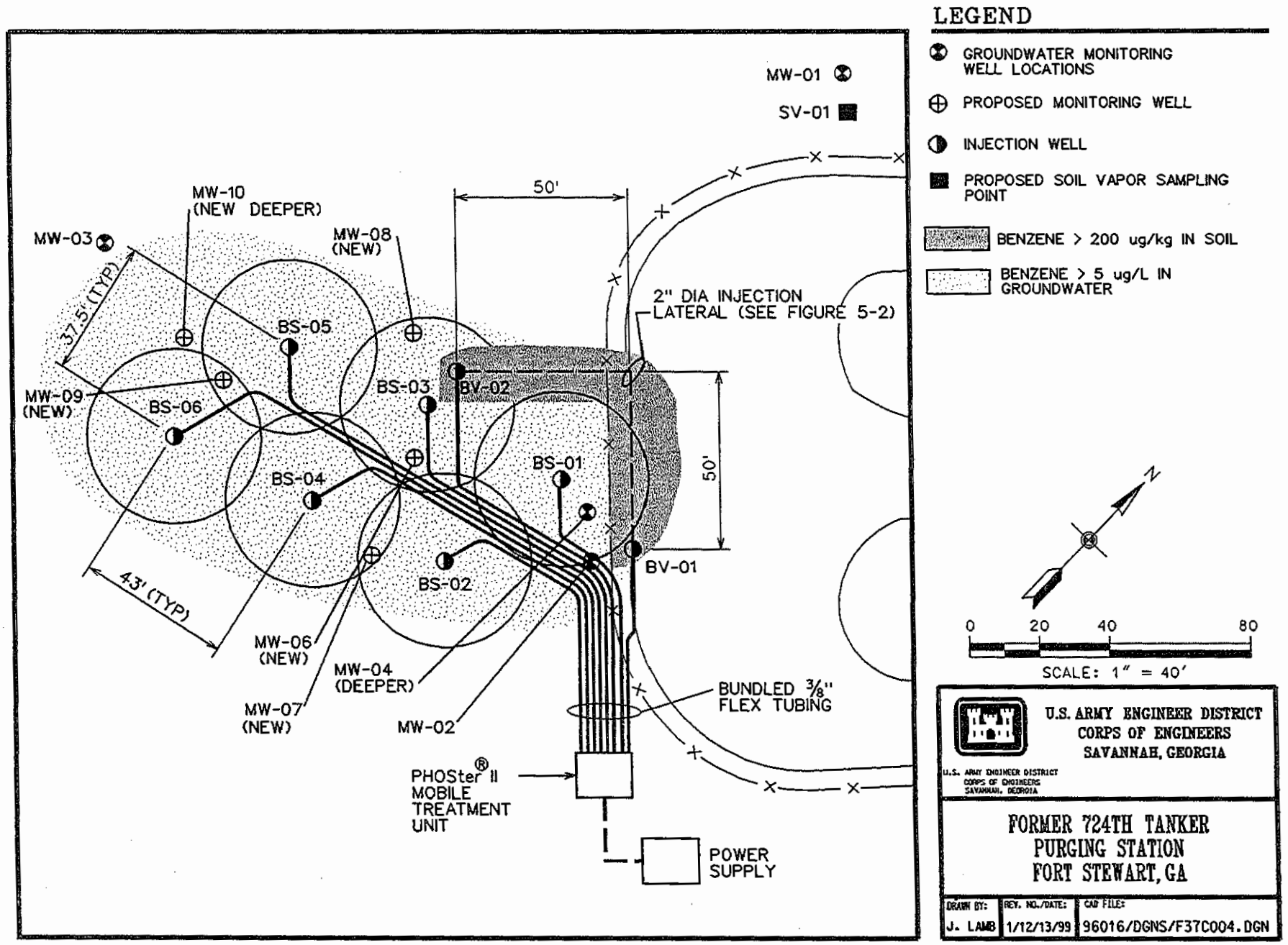

Figure 5-1. Conceptual Design Layout

52

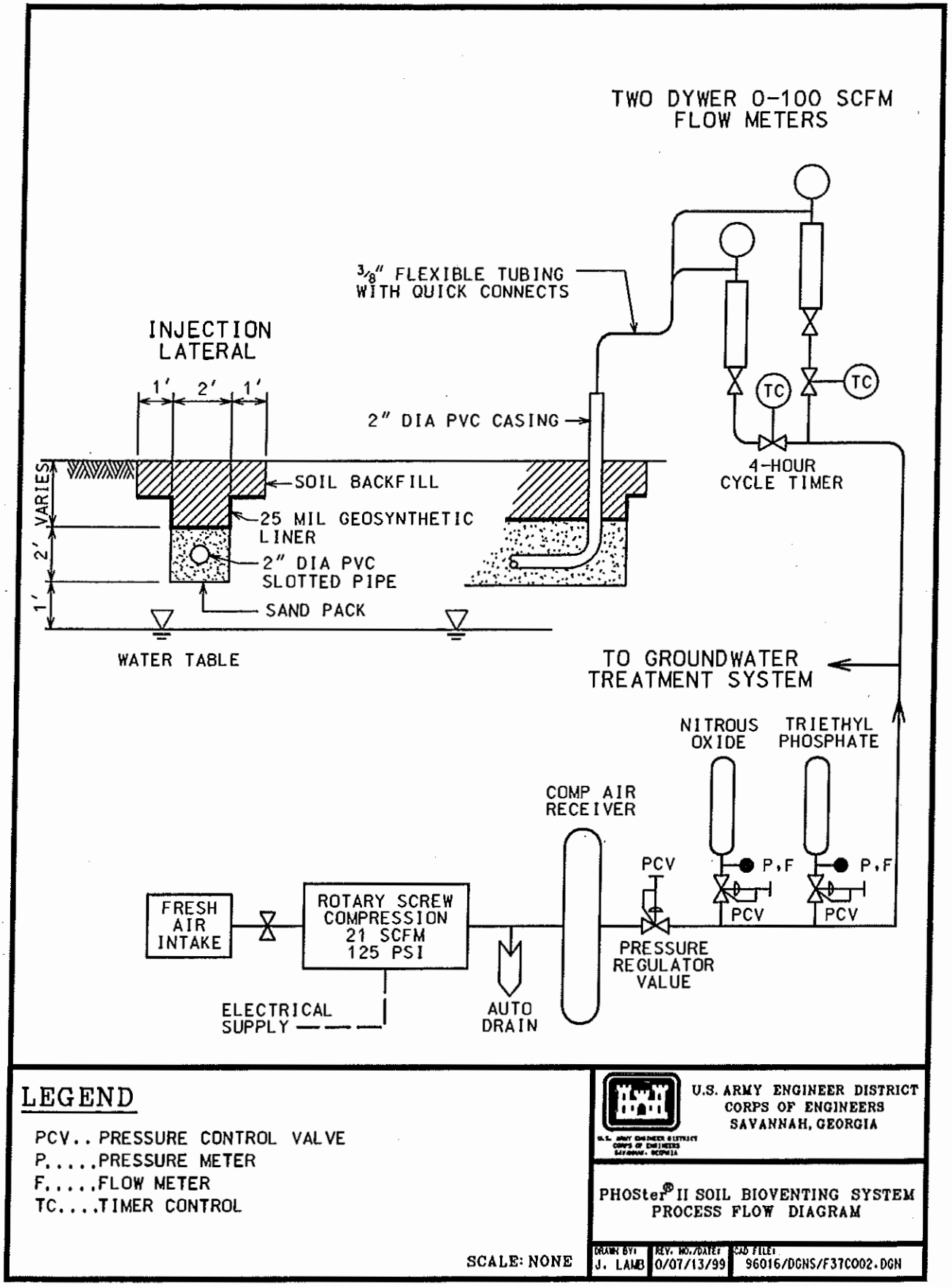

Figure 5-2. PHOSter® II Soil Bioventing System Process Flow Diagram

No pilot test data are available for establishing the radius of influence. Previous case studies have indicated that a radius of influence of 45 feet or more is possible in silty sands similar to those at the site. Because the area of contamination is approximately 20 feet wide, only a 10-foot radius of influence is required. Therefore, a single injection lateral is used for the conceptual design. The actual radius of influence and respiration rate will be confirmed during installation of the injection lateral. Procedures described in EPA's Bioventing Principles and Practice Manual (EPA 1995) will be followed for determining the radius of influence and respiration rate.

The injection lateral will consist of 2-inch-diameter slotted high-density polyethylene (HDPE) pipe that will be installed in a shallow trench and backfilled with a sand pack 1 foot thick all around the pipe that would serve as filter and bedding material. A 25-mil geomembrane liner will be place above the sand pack to act as a barrier to upward migration of vapors within the trench and will be anchored into the sides of the trench. A 2-inch-diameter non-slotted HDPE riser piper will be installed at the either end of the injection lateral with a top port that allows quick connection to 3/8-inch-diameter flexible tubing.

Based on a typical injection pressure of 2 to 3 pounds per square inch gauge (psig) and a typical airflow rate of 0.1 to 0.2 standard cubic feet per minute (scfm) per foot of well screen, a total operating vapor injection rate of 10 to 20 scfm is planned. The injected vapor will be supplied using a PHOSter® II mobile treatment unit, a prefabricated unit containing a compressor, nitrogen and phosphorous injection systems, control panels, and flow meters. The mobile unit is a fully-enclosed trailer-mounted unit approximately 8 feet wide by 12 feet deep.

Bioventing Operational Life Model. The time required to achieve RLs has been estimated using benzene as the primary COC and assuming a degradation half-life of 11 days. In soil, the time required to degrade benzene from a maximum of 9,040 μg/kg to its RL of 20 μg/kg has been estimated to require 98 days (3.2 months). There is uncertainty regarding the actual time required for treatment because the PHOSter® II technology is innovative and relatively new. It is therefore prudent to plan on operating the system for at least 4 more months to account for this uncertainty. In addition, contingent actions are identified in the O&M Plan (Appendix D) to ensure that RLs will be met.

Bioventing Operation and Maintenance. Bioventing systems are very simple and require a minimum of O&M. The general O&M tasks include weekly operational checks of the system pressure and airflow, checking for leaks and that system components are in working order. Appendix D presents the O&M Plan. Pulsed air injection has been shown to be more efficient than continuous operation in removing contaminant mass. The conceptual design of the bioventing system is to operate the injection system over 4-hour cycles; air would be injected continuously for 4 hours, then turned off for 4 hours, and subsequently turned back on.

Soil Monitoring. Monthly soil gas monitoring and respiratory testing will be conducted to verify that the site is sufficiently oxygenated and that active biodegradation is occurring. Soil gas concentrations of oxygen, carbon dioxide, benzene, and total hydrocarbons will be measured while the system is operating. After these measurements are collected, the bioventing system will be turned off and soil gas concentrations of oxygen and carbon dioxide will be measured hourly until oxygen levels drop below 5 percent or are no longer declining. The oxygen utilization rate will be used as an indicator that bioremediation is complete; once the oxygen utilization rate in the contaminated area is similar to that in the background (uncontaminated) area, operation of the bioventing system will be suspended (anticipated to be after 4 months of operation). A soil vapor sampling point will be installed near the upgradient monitoring well (MW-1) at the site to measure background oxygen utilization. Figure 5-3 shows the location of the soil vapor sampling

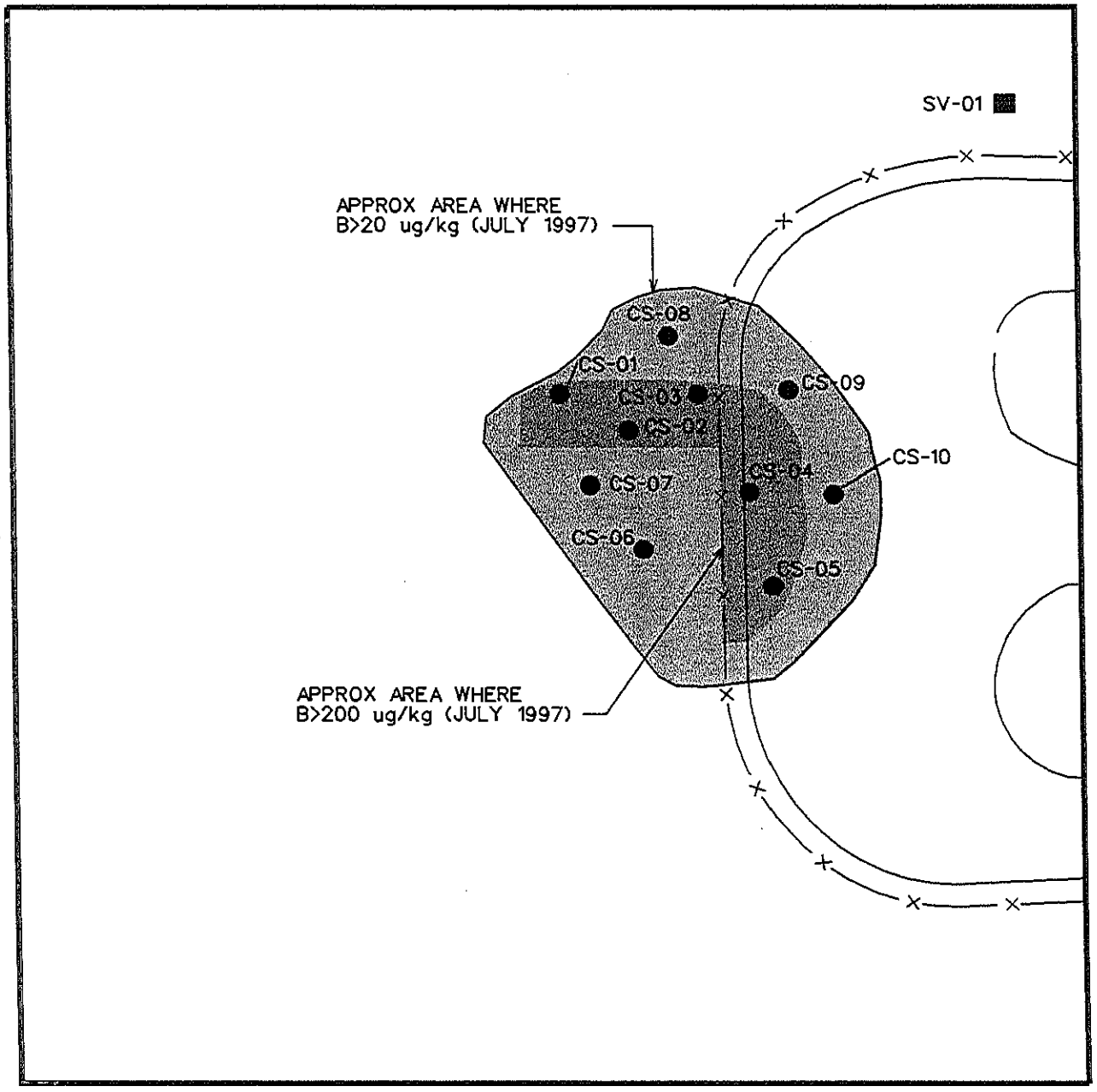

LEGEND

- PROPOSED CONFIRMATION SOIL SAMPLE LOCATIONS
- PROPOSED SOIL VAPOR SAMPLING POINT

B - BENZENE

ALL DATA IN ug/kg

- B > 200 ug/kg
- 20 < B < 200 ug/kg

N

0 20 40 80

SCALE: 1" = 40'

U.S. ARMY ENGINEER DISTRICT
CORPS OF ENGINEERS
SAVANNAH, GEORGIA

U.S. ARMY ENGINEER DISTRICT
CORPS OF ENGINEERS
SAVANNAH, GEORGIA

FORMER 724TH TANKER
PURGING STATION
FORT STEWART, GA

DRAWN BY:	REV. NO./DATE:	CAD FILE:
J. LAMB	0/12/13/99	96016/DGNS/F37C004B.DGN

Figure 5-3. Locations of Soil Vapor Sampling Point and Confirmatory Soil Samples

point (SV-01). Soil sampling will then be conducted to verify that benzene concentrations have declined to below 20 μg/kg. A total of 10 subsurface soil samples will be collected from the locations shown on Figure 5-3, within the source area at a depth just above the water table. Samples will be analyzed at an off-site laboratory for VOCs and PAHs. Analysis for PAHs in lieu of the full suite of SVOCs is appropriate because naphthalene is the only SVOC that is a COC at the site.

Bioventing Completion Criteria. Completion criteria are listed in the O&M Plan (Appendix D). Operation of the bioventing system will be ceased upon attaining a maximum benzene concentration in the soil of 20 μg/kg. Confirmation soil sampling will be conducted at the end of the 1-year confirmation groundwater sampling to verify that the soil RLs have been achieved for all COCs and that corrective action is complete. Up to 10 soil samples will be collected from random locations within the formerly contaminated vadose-zone soil area at a depth just above the water table. As discussed in the O&M Plan in Appendix D, sample locations will be within the area of contamination delineated in the Phase II RFI report. Figure 5-3 shows the preliminary locations of confirmatory soil samples. Samples will be analyzed for VOCs and PAHs. If results of the soil sampling conducted immediately after the 4-month O&M period indicate that RLs have been met for all COCs in soil, then a second confirmation soil sampling event will not be needed.

5.2.3 Enhanced Biodegradation of Groundwater

The PHOSter® II groundwater treatment system conceptual design is based on the results of published case studies provided by the system vendor, extrapolated to conditions at the Former 724th TPS site. Figure 5-1 indicates the location of the groundwater plume that requires corrective action and the conceptual design layout. Figure 5-4 is a process flow schematic and shows the conceptual design components of the PHOSter® II groundwater treatment system.

Groundwater Treatment Conceptual Design Layout. The contaminated groundwater plume extends over an oval-shaped area about 90 feet wide and 180 feet long. The depth of groundwater contamination is limited predominantly to the upper 20 feet of the shallow aquifer zone. The conceptual design for the nutrient/air injection system includes the installation of six vertical injection wells in this area of the groundwater plume (Figure 5-4). No pilot test data are available for establishing the radius of influence. Previous case studies have indicated that a radius of influence of 45 feet or more is possible in silty sands similar to those at the site. To be conservative, a 25-foot radius of influence is used for the conceptual design. The actual radius of influence will be confirmed during installation of the wells; if the actual radius of influence is significantly different than the 25-foot radius used in the design, the number of injection wells will be increased or decreased accordingly.

Each injection well will consist of 2-inch-diameter slotted HDPE pipe that will be screened over the interval between 19 and 20 feet below the water table. A sand pack will be placed in the annulus around the pipe to a level 1 foot above the top of the screened section. A 2-foot-thick bentonite seal will be placed above the sand pack, and the remainder of the borehole will be filled with a cement-bentonite grout to the ground surface. A 2-inch-diameter non-slotted HDPE riser piper will be completed about 3 feet above the ground surface and will be equipped with a top port that allows quick connection to 3/8-inch-diameter flexible tubing.

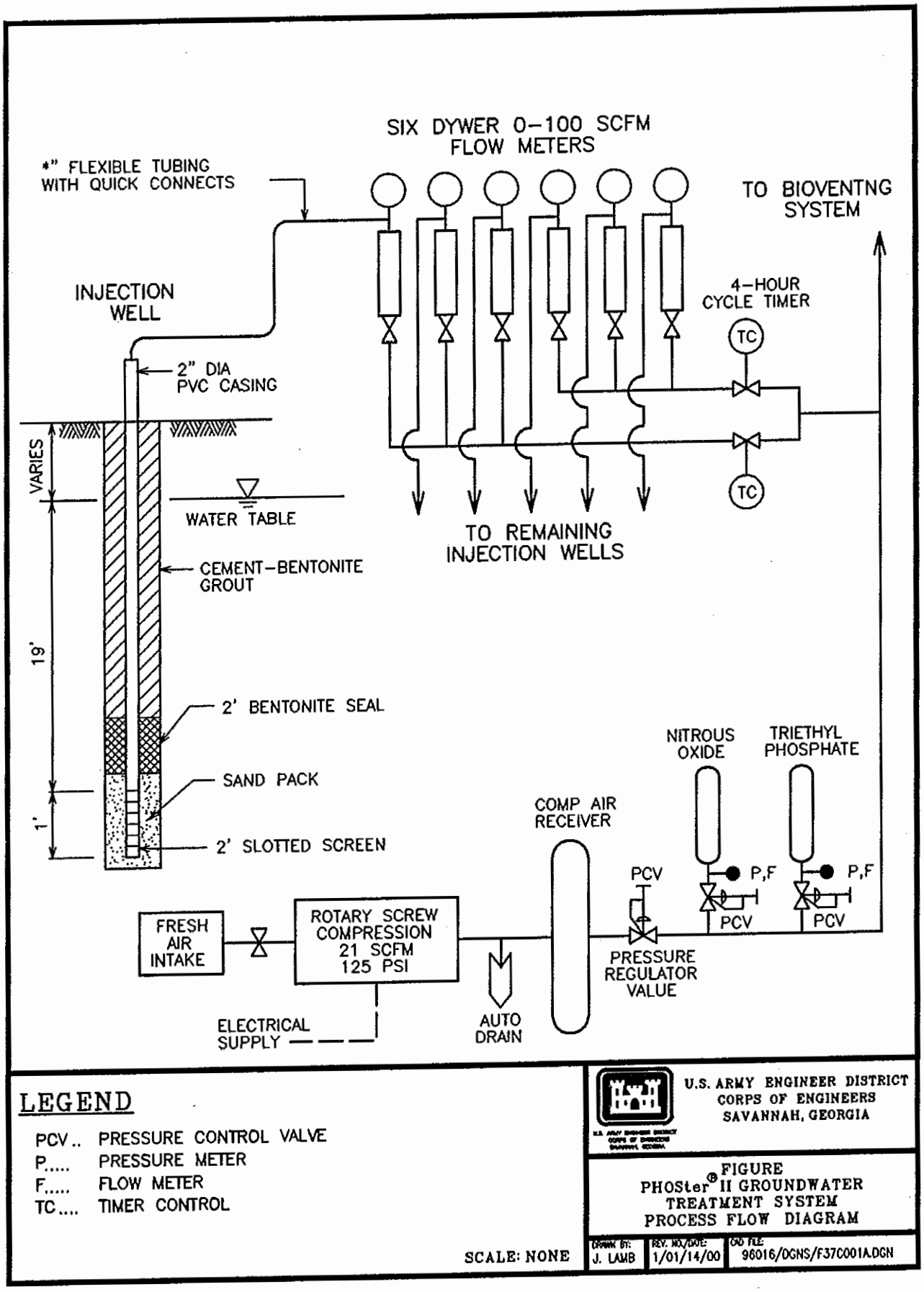

Figure 5-4. PHOSter® II Groundwater Treatment Process Flow Diagram

Based on a typical injection pressure of 2 to 3 psig and a typical airflow rate of 0.1 to 0.2 scfm per foot of well screen, an injection rate of 1 to 2 scfm per well is planned. Because three wells will be operated at any given time, the total operating vapor injection rate will be 3 to 6 scfm. The injected vapor will be supplied using the same PHOSter® II mobile treatment unit as used for bioventing, with separate control panels and flow meters.

Operational Life Model. As in soil treatment, the time required to achieve RLs in groundwater has been estimated using benzene as the primary COC and assuming a degradation half-life of 11 days. In groundwater, the time required to degrade benzene from a maximum of 8,090 μg/L to its MCL of 5 μg/L has been estimated to require 117 days (4 months). There is uncertainty regarding the actual time required for treatment because the PHOSter® II technology is innovative and relatively new. It is therefore prudent to plan on operating the system for at least 4 more months to account for this uncertainty. In addition, contingent actions are identified in the O&M Plan (Appendix D) to ensure that RLs will be met.

Operation and Maintenance. Air injection systems are very simple and require a minimum of O&M. The general O&M tasks include weekly operational checks of the system pressure and airflow, checking for leaks and that system components are in working order. Appendix D presents the O&M Plan. Pulsed air injection has been shown to be more efficient than continuous operation in removing contaminant mass, particularly where the soil layers have higher clay or silt content. The conceptual design of the groundwater treatment system is to operate the injection system over 4-hour cycles; air would be injected continuously in a given well for 4 hours, then turned off for 4 hours, and subsequently turned back on. Because there are six injection wells, the conceptual design is to actively inject in three wells at any given time. Therefore, the system will operate continuously, alternating between two sets of three injection wells each.

Groundwater Monitoring. The conceptual design includes the installation of four additional shallow monitoring wells and one additional deep monitoring well to augment the existing four wells (note that existing well MW-05 is located at Mill Creek and will not be sampled). The proposed wells (MW-6, MW-7, MW-8, MW-9, and MW-10) will be located as shown on Figure 5-1 within the contamination plume where benzene concentrations in direct-push groundwater samples taken during the RFI were highest (i.e., GP-1 at 8,090 μg/L). The shallow wells will be screened to bisect the water table, for a total depth of less than 20 feet. The deep well (MW-10) will be screened between a depth of 35 and 45 feet below land surface. The wells will be used to more accurately observe the reduction in benzene concentrations during remediation and to verify the effectiveness of treatment after remedial activities are completed.

During O&M of the groundwater treatment system, the nine groundwater monitoring wells will be sampled to verify that benzene concentrations are declining and that active biodegradation is occurring. On a monthly basis, samples will be taken and analyzed at an off-site laboratory for BTEX and for natural attenuation parameters (methane, carbon dioxide, total phosphorous, nitrate/nitrite, sulfate/sulfide, and total iron). Field measurements will be made of dissolved oxygen (DO), temperature, oxidation-reduction potential (Eh), conductivity, pH, and ferrous iron. A simplified respiration test will be run on one of the new monitoring wells (MW-6) during the monthly groundwater sampling by shutting off air injection and monitoring DO and carbon dioxide concentrations in the well for approximately 8 hours.

Groundwater Treatment Completion Criteria. Completion criteria are listed in the O&M Plan (Appendix D). Operation of the groundwater treatment system will be ceased upon attaining a maximum benzene concentration in each of the nine on-site wells of 5 μg/L, as measured during the monthly groundwater monitoring.

Confirmation groundwater sampling will be conducted at the end of the active treatment period to verify that the groundwater RLs have been achieved for all COCs. Upon completion of the air injection (approximately 4 months), groundwater will be monitored on a quarterly basis for 1 year. Samples will be collected from each of the nine on-site wells and analyzed for VOCs and PAHs. Analysis for PAHs in lieu of the full suite of SVOCs is appropriate because naphthalene is the only SVOC that is a COC at the site.

5.3 OPERATION AND MAINTENANCE PLAN

O&M includes weekly inspections of the equipment components and monthly monitoring of benzene contamination trends in groundwater. Appendix D presents the O&M Plan for the selected remedial alternative.

5.4 LIFE-CYCLE COST ESTIMATE

The life-cycle cost estimate for the selected PHOSter® II system alternative is $579,000 (see Appendix C for cost components). The capital costs, including indirect costs, are estimated to be $373,000 and would include engineering services (Work Plan, Site Safety and Health Plan, contracting/procurement, permitting, construction oversight for monitoring and injection well installation) and system installation (site preparation, mobilization/demobilization, monitoring and injection well installation, PHOSter® II equipment installation).

The O&M costs, including indirect costs, are estimated to be approximately $206,000 and would include groundwater monitoring, soil analysis, and O&M for the PHOSter® II system. The required monitoring time for the system is assumed to be 4 months based on the assumptions presented in Section 5.2.3. An additional year of confirmatory sampling will be required to verify that RLs have been achieved in both groundwater and soil.

5.5 IMPLEMENTATION SCHEDULE

Implementation of the corrective action will begin once approval of this CAP is received from GEPD. It is anticipated that a construction contractor can be procured within 4 months following approval of the CAP and that the final corrective action work plan (including appropriate reviews by the Army) will be completed within 4 months thereafter. Mobilization, installation, and startup of the PHOSter® II system will take an additional 2 months. Based on the estimated operational life model, remediation will be complete within an estimated 4 months, although it is prudent to allow an additional 4 months for any contingent action due to the uncertainties associated with the technology. Confirmatory sampling will continue as required for 1 year following treatment. A Corrective Action Completion Report will be prepared and submitted to GEPD for review within 4 months thereafter. The anticipated implementation schedule is presented in Figure 5-5.

5.6 PROGRESS REPORTS

A progress report will be prepared both at the end of system installation and startup and at the end of the anticipated 4-month O&M period of the PHOSter® II nutrient/air injection system. These

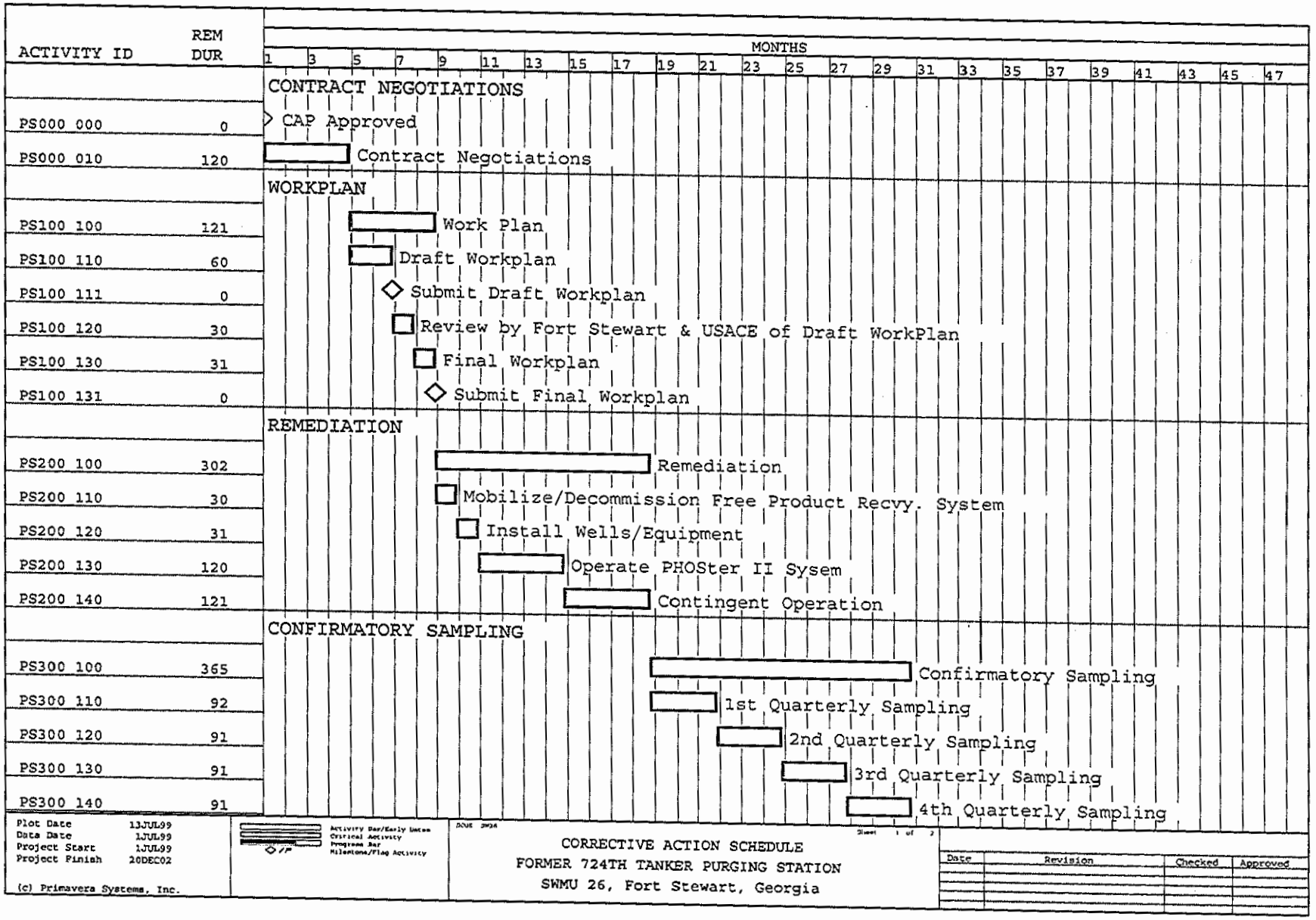

Figure 5-5. Corrective Action Implementation Schedule

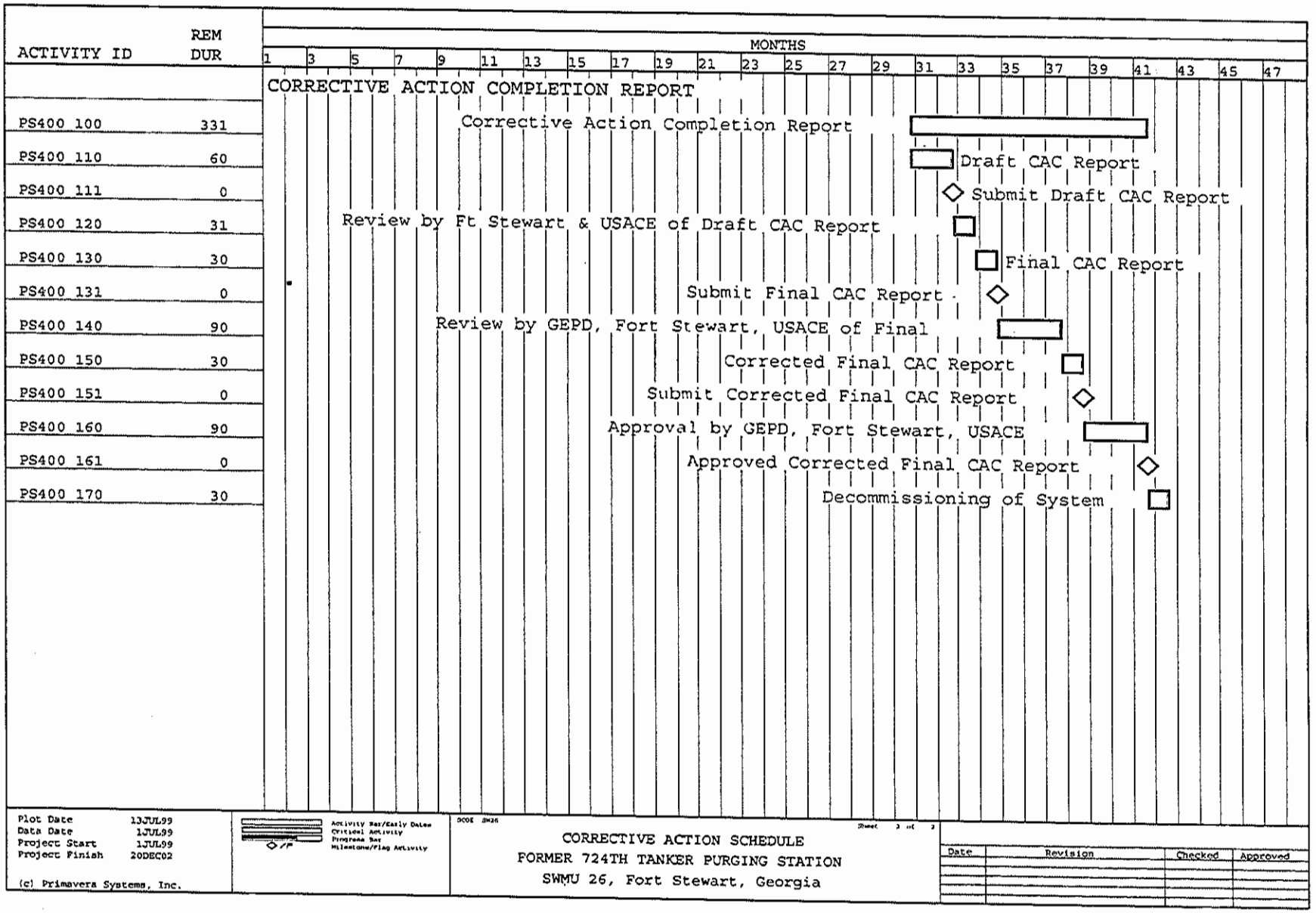

Figure 5-5. Corrective Action Implementation Schedule (continued)

reports will summarize the installation, operation, maintenance, sampling, and analysis performed during system startup and the 4-month O&M period. An analysis of trends and effectiveness of the corrective action will be presented, as will the need for any contingent action discussed, as required.

A progress report will be prepared quarterly during the 1-year confirmatory sampling period. The report will summarize the results of the groundwater sampling and analysis completed during that quarter. An analysis of any deviations from the required RLs and the need for any contingent action will be discussed, as required.

A checklist is presented in the O&M Plan (Appendix D) summarizing the items to be addressed in each Progress Report.

A final Corrective Action Completion Report will be prepared following the completion of the corrective action and confirmation sampling. The Corrective Action Completion Report will summarize the corrective measures taken at the site, provide a summary of system performance and sampling data, and give results of the confirmation groundwater and soil sampling.

5.7 IMPLEMENTATION PLAN

Upon approval of this CAP by GEPD, Fort Stewart will request funding, procure a contractor for implementing the corrective action, and implement the specified action. A corrective action work plan will be prepared to guide implementation of the corrective action but will not require GEPD review or approval. Any revisions needed to the O&M Plan (Appendix D) or the Implementation Schedule (Figure 5-4) that become apparent during preparation of the work plan will be submitted to GEPD for concurrence. Substantive changes in the remediation approach or schedule will require that the public be provided with an opportunity for review and comment in accordance with the Fort Stewart Public Involvement Plan. No other submittals will need to be provided prior to implementing the selected corrective action.

During the corrective action, progress reports as defined in Section 5.6 will be prepared and submitted to GEPD for review. Upon completion of the corrective action, a Corrective Action Completion Report as defined in Section 5.6 will be prepared and submitted to GEPD for review and approval. Decommissioning of the treatment system (Appendix D) will not begin until after approval of the Corrective Action Completion Report has been received by GEPD and will include removal of all equipment and plugging and abandonment of any below-grade wells or piping.

Georgia Department of Natural Resources

205 Butler Street, S.E., Suite 1162, Atlanta, Georgia 30334
Lonice C. Barrett, Commissioner
Environmental Protection Division
Harold F. Reheis, Director
404/656-2833

Post-it® Fax Note 7671	Date 12/9	# of pages ▶ 3
To MELANIE LITTLE	From BRENT RABON	
Co./Dept. FORT STEWART	Co. GA EPD	
Phone #	Phone # 404 656 2833	
Fax # 465 364 8423	Fax #	

December 8, 1999

CERTIFIED MAIL
RETURN RECEIPT REQUESTED

Ovidio E. Perez, Colonel, U.S. Army
Director, Public Works
ATTN: AFZP-DEV (Melanie Little)
Department of the Army
Headquarters, 3D Infantry Division (Mechanized) and Fort Stewart
1557 Frank Cochran Drive
Fort Stewart, GA 31314-4928

RE: Corrective Action Plan (CAP) for the Former 724th Tanker Purging Station [Solid Waste Management Unit (SWMU) 26] dated July 1999; Fort Stewart; EPA ID No. GA9 210 020 872.

Dear Colonel Perez:

The Hazardous Waste Management Branch of the Georgia Environmental Protection Division (GA EPD) has reviewed the above-referenced plan and generated the following comments.

1. Please delete the phrases "as required by GEPD regulations 391-4-.14(48)" on pages xiii & 5-9 and "per GEPD regulations 391-3-4-.14(48)" on pages D-3 & D-6 or justify their inclusion.

2. Fort Stewart states that any revisions needed to the Operation and Maintenance (O&M) Plan (Appendix D) or the Implementation Schedule (Figure 5-4) that become apparent during the preparation of the work plan will be submitted to GA EPD for concurrence (See the *Implementation Plan* Sections on page xiii and 5-13). While GA EPD is not opposed to this strategy, please note that any modification to the SWMU 26 CAP (including the O&M Plan in Appendix D) would require that the public be provided with an opportunity for review and comment on proposed changes prior to formal approval by our agency. This position is consistent with the requirements of Conditions IV.E.3 and IV.E.4 in your Hazardous Waste Facility Permit No. HW-045(S&T) and of the Proposed Remedy Selection guidance provided on pages 4-10 through 4-12 of the *RCRA Public Involvement Manual dated September 1993 (EPA530-R-93-006)*.

3. Please justify the two (2) response remedial objectives in the second sentence of Section 3.2 (page 3-1) or modify the sentence as follows.

The remedial response objectives for the Former 724th Tanker Purging Station are: (1) to reduce the concentrations of BTEX, acetone and napthalene in vadose zone soils to the Remedial Levels identified in Table 3-1 so as to prevent further release of these hazardous constituents at levels which negatively impact groundwater and (2) to remediate groundwater to the Remedial Levels identified in Table 3-1 for these same hazardous constituents.

4. Several of the corrective action technologies being screened in Section 4.0 would require permitting under the Underground Injection Control (UIC) Program within the GA EPD Geologic Survey Branch [e.g., Fort Stewart has correctly identified the need for a UIC Permit for the proposed remedy in the third sentence of the *Implementability* Section (page 5-2)]. All remedies which involve injection (air sparging, enhanced bioremediation, and PHOSter® II) should include a brief notation of UIC permitting requirements in Section 4.1.2. The *Implementation* column in Table 4-1 should also include a notation of this requirement for all remedies to which it applies. (The cost estimate summaries presented in Appendix C appear to have this cost already factored in and do not require modification.)

5. The SWMU 26 CAP calls for the installation of only one additional monitoring well for corrective action monitoring [e.g., see Bullet No. 2 in Section 4.3.2 (page 4-6)]. The proposed well would be located at the center of the groundwater plume, in the area of highest known contamination. The existing groundwater monitoring network, even with the addition of the proposed new well, does not appear adequate to determine the effectiveness of corrective action for the horizontal and vertical extent of groundwater contamination which was documented in the Phase II RFI Report for SWMU 26 dated November 1998, as amended. Fort Stewart must propose additional monitoring well locations which provided for sufficient coverage of the hazardous constituent contamination in groundwater requiring corrective action. For cost comparison purposes, additional wells would also be required for the other proposed remedies. Please modify all applicable Sections and Appendices of the SWMU 26 CAP in a manner which appropriately responds to this comment.

6. In Figure 4-1 (page 4-9), please modify the text of Alternative 6 to read "soil treatment to 20 µg/kg."

7. While GA EPD recognizes that Fort Stewart will request concurrence on the contingent soil sampling proposed in the *Bioventing Completion Criteria* Section on page 5-7 (i.e., after the one year confirmation groundwater monitoring period), please provide a map of the proposed ten (10) subsurface soils samples which will be collected after the operation of the bioventing system is suspended (anticipated after four months of operation). Please provide the requested map as a part of the *Soil Monitoring* Section on page 5-6 or as a part of Section 4.3 in Appendix D (page D-7).

8. Consistent with Sections II.D and II.H of the O&M Plan guidance provided on page 78 of the *Final RCRA Corrective Action Plan Guidance dated May 1994 (EPA 520-R-94-004)*, Fort Stewart must include Personnel Training and Waste Management Practices Sections in the body of the O&M Plan (Appendix D).

   With respect to the Waste Management Practices Section, GA EPD is specifically concerned with the final disposition of soils at SWMU 26 removed/excavated in order to install additional monitoring wells and the PHOSter® II system (e.g., the injection lateral within the vadose zone). Please also address this issue in Section 5.2 of the revised SWMU 26 CAP.

9. Fort Stewart must notify GA EPD in the event of a major breakdown and/or complete failure of the proposed final remedy. Please modify Section 7.0 in O&M Plan (Appendix D) to include language similar to the following in a manner which is consistent with guidance provided on page 79 of the *Final RCRA Corrective Action Plan Guidance dated May 1994 (EPA 520-R-94-004)*.

   > In the event of a major breakdown and/or complete failure of the PHOSter® II system (including emergency situations) at SWMU 26, Fort Stewart will orally notify GA EPD within twenty-four (24) hours of the event and will notify GA EPD in writing within seventy-two (72) hours of the event. Written notification will, at a minimum, specify what happened, what response action is being taken and/or is planned, and any potential impacts on human health and/or the environment.

The revisions for the above-referenced plan, appropriately addressing the comments above, should be submitted within forty-five (45) days of receipt of this correspondence in the form of revised/new pages or a totally revised plan. Note that four (4) copies of the revised plan are required to be submitted to GA EPD in accordance with Condition IV.G.2 of your Permit. Should Fort Stewart decide to submit revised or new pages, please number with appropriate page numbers and the date revised, e.g., Page 6 (Revised 12/15/99). Should you have any questions concerning this correspondence, please contact Brent Rabon or Madeleine Kellam of my staff at (404)656-2833.

Sincerely,

Bruce Khaleghi

Bruce Khaleghi, Unit Coordinator
Hazardous Waste Management Branch

c: Mr. Larry Rogers, GA EPD-Southeast Regional Office
File: Fort Stewart(R)
R:\BRENTR\STEWARTPERMITS\SWMU26\CAP.COM

DEPARTMENT OF THE ARMY
HEADQUARTERS, 3D INFANTRY DIVISION (MECHANIZED) AND FORT STEWART
DIRECTORATE OF PUBLIC WORKS
1557 FRANK COCHRAN DRIVE
FORT STEWART, GEORGIA 31314-4928

REPLY TO
ATTENTION OF

NOV 02 1999

AFZP-PWV-E (200-1a)

MEMORANDUM FOR HEADQUARTERS, FORSCOM, DCSPIM, ATTN:
STEPHANIE SIGLER, 1777 HARDEE AVENUE SW.,
FORT MCPHERSON, GA 30330-1062

SUBJECT: Decision Document for Final Remedial Action at the Former Tanker Purging Station (SWMU 26), Fort Stewart, Georgia

1. The attached decision document is provided for your use and convenience in distributing funding for ER,A projects at Fort Stewart. The decision document summarizes the site conditions at the former Tanker Purging Station (SWMU 26) at Fort Stewart which has led the Directorate of Public Works (DPW) Environmental Branch to submit a Corrective Action Plan (CAP) to GA EPD for this site. Implementation of the CAP will begin immediately upon State approval of the report (anticipated in 2d QTR FY00).

2. Mr. Wayne Mandell at the Army Environmental Center has reviewed and approved this decision document, per a telephone conversation with Ms. Melanie Little on September 22, 1999.

3. The point of contact for this memorandum is Ms. Melanie Little or Ms. Tressa Rutland, DPW Environmental Branch, at (405) 364-8461 or (912) 767-7919, respectively.

FOR THE COMMANDER:

Encl

OVIDIO E. PEREZ
COL, EN
Director, Public Works

DECISION DOCUMENT FOR FINAL REMEDIAL ACTION AT THE FORMER TANKER PURGING STATION (SWMU 26) FORT STEWART, GEORGIA

PURPOSE OF THE FINAL REMEDIAL ACTION

This decision document describes the selected final remedial action for the Former 724th Tanker Purging Station (TPS) (Solid Waste Management Unit [SWMU] 26) at Fort Stewart, Georgia.

The Former 724th TPS was located in the western cantonment area, which is in the southern portion of the Fort Stewart Military Reservation (FSMR). The tanker purging station was an area where tanker trailers that carried diesel, JP-4 jet fuel, and mogas were routinely cleaned. During August 1996 the tanker purging station was dismantled, the underground facilities were removed, and approximately 525 yd^3 of contaminated soil were excavated and replaced with clean backfill.

Potential contamination due to fuel leakage at the site was investigated during a Phase I Resource Conservation Recovery Act Facility Investigation (RFI) for 24 SWMUs at Fort Stewart in 1993. Analytical results from soil sampling conducted at the Former 724th TPS indicated fuel product and solvent contamination in soil. Based on these findings, Georgia Environmental Protection Division (GA EPD) instructed the Fort Stewart Directorate of Public Works (DPW) to conduct a Phase II RFI at the site.

The objectives of the Phase II RFI for the Former 724th TPS, as defined in the Work Plan approved by GA EPD on June 10, 1997 were to:

- Determine the horizontal and vertical extent of contamination.
- Determine whether contaminants present a threat to human health or the environment.
- Determine the need for future action and/or no further action.
- Gather necessary data to support a Corrective Action Plan (CAP), if warranted.

Results of the Phase II RFI chemical analyses indicated that soils, groundwater, surface water, and sediment at the site

contain organic and metal constituents at concentrations greater than their reference background concentrations. The predominant constituents in both soil and groundwater are fuel-related chemicals such as benzene, toluene, ethylbenzene, and total xylene (BTEX) compounds, with secondary contaminants such as acetone, 1,1-dichloroethane, and polyaromatic hydrocarbon (PAH) compounds.

Contamination present in surface and subsurface soils is dominated by BTEX and secondary PAH contaminants. Maximum BTEX concentrations reported in soil include benzene (9420 μg/kg), toluene (27,400 μg/kg), ethylbenzene (27,100 μg/kg), and total xylenes (124,000 μg/kg). BTEX contamination in soil extends to the water table (approximately 6 feet deep) and is greatest immediately north and east of the area where contaminated soils were removed in August 1996. The soil contamination covers an approximate 4500 square foot area (approximately 60 feet by 75 feet).

BTEX contamination in groundwater extends to a depth of approximately 20 feet below the water table, although isolated areas of BTEX were found in groundwater to depths up to 40 feet. Maximum concentrations were found in a water table well at the site (MW-2) and include benzene (8,090 μg/L), toluene (4,200 μg/L), ethylbenzene (2,870 μg/L), and total xylenes (12,100 μg/L). These concentrations exceed the respective Maximum Contaminant Levels (MCLs) for each constituent. The BTEX contamination covers a plume area approximately 100 feet wide by 160 feet long, extending from the former 724th TPS facilities to the north and west. Mill Creek, the nearest downgradient surface water body, is located more than 1,000 feet from the leading edge of the BTEX plume and is therefore not being impacted by the contamination. Biodegradation of the BTEX is likely occurring, as evidenced by the presence of methane, a breakdown product of BTEX degradation.

Limited metal contamination (principally barium, mercury, and silver) is present at the site and in the ditch immediately west of the site. In surface and subsurface soils at the site, maximum concentrations of barium (14.1 mg/kg) and mercury (0.06 mg/kg) were reported. In groundwater at the site, maximum concentrations of arsenic (3.5 μg/L), barium (99.2 μg/L), mercury (0.3 μg/L), and silver (4.1μg/L), were reported, although concentrations in the upgradient well MW-1 were generally higher than those in the downgradient wells and

therefore may not be site-related. In sediments within the ditch, concentrations of barium (29.2 mg/kg), mercury (0.07 mg/kg), and silver (2.6 mg/kg) were reported at levels above reference background criteria for both sediment and soil media. In addition, lead (6.6 mg/kg) was higher than reference background criterion for sediment, but below the criterion for soil and therefore may not be site-related. In surface water, concentrations of cadmium (1.7 μg/L), lead (10.8 μg/L), and mercury (0.18 μg/L) were reported at levels above reference background criteria for both surface water and groundwater. Arsenic (1.8 μg/L) and silver (1.3 μg/L) were higher than reference background for surface water, but below the criteria for groundwater and therefore may not be site-related.

The results of the Phase II RFI and conclusions regarding nature and extent of contamination, fate and transport, human health risk, and ecological risk, indicated that a Corrective Action Plan (CAP) was required to address the soil and groundwater contamination. After evaluation of alternatives, the CAP (currently being reviewed by GA EPD) recommends that the final remedial action consist of Phoster® II enhanced bioremediation and bioventing (see Table 1, Corrective Action Alternatives).

SUMMARY OF SITE RISK

A quantitative risk evaluation has not been completed for the site; however, the analytical results from the Phase I and Phase II RFIs have been reviewed and a qualitative risk evaluation completed. Potential risks to human health and the environment do exist, based on the constituents detected during investigation activities, for both soil and groundwater.

HUMAN HEALTH RISK ASSESSMENT

The human health risk assessment included a Step 1 Risk Evaluation to determine potential human health risks associated with the contaminants. Contaminants of Potential Concern (COPCs) have been identified as those constituents present at concentrations higher than their reference background criteria and higher than their respective EPA Region III risk-based screening criteria.

In surface soil, there are no COPCs for human health, because no constituent exceeded its respective risk-based screening criterion for exposure to a residential receptor. In subsurface

Table 1. Corrective Action Alternatives

Corrective Action	Description	Time to Implement	Cost	Comments
Alternative 1. Monitored Natural Attenuation	The action would require the monitoring of contaminant levels to ensure the reduction of these levels through biodegradation and dispersion	The estimated time to reach the RL of 5 µg/L in groundwater is approximately 20 years.	Approximately $300,700 (installation of 1 monitoring well, annual monitoring of 5 wells during attenuation period, quarterly post-attenuation monitoring for 1 year, and soil verification)	Least expensive, but longest implementation time
Alternative 2. Excavation and Air Sparging	Excavation of soils above 200 µg/kg followed by air sparging of ground-water to the MCL of 5 µg/L	Air sparging treatment at 60 scfm total would require approximately 32 months to reduce the maximum concentration of benzene from 8,090 µg/L to 5 µg/L. Following excavation, natural attenuation of soils <200 µg/kg would reach the 20 µg/kg RL within the groundwater remediation time frame.	Approximately $673,700 (excavation and disposal of soils, installation of 1 monitoring well, monthly monitoring of 5 wells during treatment, treatment with 6 injection wells, post-remediation monitoring for 1 year, and soil verification)	Moderately expensive to implement and moderately short time frame
Alternative 3. Excavation and Enhanced Bioremediation (Pure Oxygen Injection)	Excavation of soils above 200 µg/kg followed by enhanced bioremediation of groundwater to MCL of 5 µg/L	Oxygen injection treatment at 28 scfm total would require approximately 35 months to reduce the maximum concentration of benzene from 8,090 µg/L to 5 µg/L. Following excavation, natural attenuation of soils <200 µg/kg would reach the 20 µg/kg RL within the groundwater remediation time frame.	Approximately $845,600 (excavation and disposal of soils, installation of 1 monitoring well, monthly monitoring of 5 wells during treatment, treatment with 40 injection points, post-remediation monitoring for 1 year, and soil verification)	More costly than Alternative 2 with slightly longer implementation time
Alternative 4. Air Sparging and Monitored Natural Attenuation	Air sparging of groundwater to 50 µg/L followed by natural attenuation of residual contamination in soil and groundwater (no excavation of soil)	Air sparging treatment at 60 scfm total would require approximately 22 months to reduce benzene to 50 µg/L. Natural attenuation would then require approximately 6 years to reach the RL of 5 µg/L. Natural attenuation of soils would reach the 20 µg/kg RL within the groundwater remediation time frame.	Approximately $495,900 (installation of 1 monitoring well, monthly monitoring of 5 wells during treatment, treatment with 6 injection wells, monitored natural attenuation for 6 years, post-remediation monitoring for 1 year, and soil verification)	Less costly than Alternative 2 with twice the length of time needed to implement
Alternative 5. Enhanced Bioremediation and Monitored Natural Attenuation	Enhanced bioremediation of groundwater to 50 µg/L followed by natural attenuation of residual contamination in soil and groundwater (no excavation of soil)	Oxygen injection treatment at 28 scfm total would require approximately 24 months to reduce benzene to 50 µg/L. Natural attenuation would then require approximately 6 years to reach the RL of 5 µg/L. Natural attenuation of soils would reach the 20 µg/kg RL within the groundwater remediation time frame.	$721,700 (installation of 1 monitoring well, monthly monitoring of 5 wells during treatment, treatment with 40 injection points, monitored natural attenuation for 6 years, post-remediation monitoring for 1 year, and soil verification)	Less costly than Alternative 3 with twice the length of time needed to implement
Alternative 6. PHOSter® II Enhanced Bioremediation and Bioventing	Enhanced bioremediation using the PHOSter® II system in groundwater to meet the RL of 5 µg/L, in situ bioventing in soil to meet the RL of 20 µg/kg.	PHOSter® II injection treatment at a total of 12 scfm would require an estimated 4 months to reduce benzene levels to 5 µg/L in groundwater and 20 µg/kg in vadose zone soil. Time to implement is highly uncertain due to limited full-scale implementation of the PHOSter® II technology.	$354,400 (installation of one monitoring well, monthly monitoring of 5 wells during treatment, treatment with 6 injection points in groundwater and a 100-foot-long lateral injection trench in vadose zone soil). Post-remediation monitoring for one year and soil verification.	Lower cost than air sparging or oxygen injection and shortest time to implement; however, much higher uncertainty on system effectiveness and required treatment time

RL = Remedial Level

soil, there are likewise no COPCs as a result of direct exposure; no constituent presents a significant potential risk to receptors. As discussed for fate and transport, acetone, benzene, toluene, ethylbenzene, xylenes, and naphthalene have been identified as contaminants in subsurface soil that may leach into groundwater at concentrations that are unacceptable in terms of groundwater use as a drinking water source.

In groundwater, the initial COPCs are acetone, arsenic, 1,2-dichloroethane, chloroform, chloromethane, and BTEX. These constituents present a potential threat to human health as a result of groundwater use as a source of drinking water. However, the maximum concentration of arsenic (3.5 μg/L) was well below its MCL of 50 μg/L, and was only slightly above its reference background concentration of 3.4 μg/L. Arsenic exceeded background in only a single downgradient well (MW-2) and was reported at an even higher concentration in the site-specific upgradient well (10.1 μg/L at MW-1). Therefore, arsenic in groundwater is not considered a potential threat to human health at the Former 724th TPS.

In addition, use of the surficial groundwater at this site for drinking water is unlikely. Given the shallow depth of the surficial aquifer and the presence of the deeper Principal Artesian aquifer (a common source of drinking water throughout the region), the use of the surficial aquifer is not considered to be a viable exposure scenario. Drinking water screening values were used in the absence of more appropriate values.

In surface water, the maximum concentration of arsenic in the drainage ditch adjacent to the site (1.8 μg/L) exceeded the Water Quality Criteria for protection of human health (0.018 μg/L). However, the screening values are based on the use of the surface waters for drinking water or harvesting food, which are not appropriate for a drainage ditch. Surface water is not used for drinking water at the site and will not be used for drinking water in the future; therefore this is not considered to be a viable exposure scenario. The maximum concentration of arsenic in surface water in the ditch is less than its groundwater reference background criteria (3.4 μg/L), and arsenic concentrations in surface soils and sediments at the site were not elevated above background. Therefore, arsenic in surface water is not considered a potential threat to human health.

In sediment, none of the contaminants are likely to present a potential human health threat to receptors coming into direct contact with them. Methylene chloride was identified as a possible COPC for sediment, as a result of leaching into groundwater at concentrations that are unacceptable based on the use of groundwater as a drinking water source. The maximum concentration of methylene chloride (2.6 μg/kg) in sediment is less than its method detection limit (5 μg/kg) and less than its average concentration in the reference background soil data (6.2 μg/kg). Methylene chloride is a common laboratory contaminant and is therefore not considered related to contaminant releases at the former 724th TPS.

In Mill Creek, the mercury concentration in the surface water sample collected downstream of the site exceeded its respective Water Quality Criteria. However, Mill Creek does not receive contaminated groundwater discharge or direct runoff from the site. Therefore, the source of mercury in Mill Creek is not from the Former 724th TPS.

ECOLOGICAL RISK ASSESSMENT

The ecological risk assessment provided a Phase 1 preliminary risk evaluation for potential terrestrial and aquatic receptors at the site. The Preliminary Risk Evaluation for the Former 724th TPS identified ecological COPCs in surface water, sediment, and groundwater based on a comparison of their maximum site concentrations to their EPA Region IV ecological screening values. Preliminary risk quotients were calculated for ecological COPCs identified in surface soil and surface water based on a comparison of detected concentrations to toxicity reference values (TRVs) for surrogate species representing ecological receptors.

Chromium and lead are present in surface soil at the Former 724th TPS at concentrations that exceed the TRVs for the robin, as do lead and selenium at the upgradient soil sampling location (MW-1). As concluded in the evaluation of contaminant nature and extent, none of these metals are present at concentrations exceeding reference background criteria and therefore none are considered site-related contaminants in surface soils.

There is uncertainty about whether silver, ethylbenzene, benzo(b)flouranthene, and styrene are ecological COPCs in surface soil, because there are no TRVs for these substances;

they are ecological COPCs by default according to GA EPD guidance. However, silver was present at a concentration (0.07 mg/kg) significantly less than its reference background criterion (0.64 mg/kg) and is therefore not site-related. Benzo(b)flouranthene and styrene were not present at the site, but were detected only at MW-5 (adjacent to Mill Creek) at concentrations near their detection limit, and are therefore not site-related. Ethylbenzene was detected at MW-2 and is related to former releases at the site, and is therefore the only ecological COPC in surface soil.

According to EPA Region IV guidance, groundwater is to be treated as surface water in the ecological preliminary risk evaluation. Treating groundwater as surface water is realistic at the Former 724th TPS site because groundwater may discharge to the drainage ditch next to the site during times of high groundwater stage.

Barium, lead, mercury, silver, benzene, and chloromethane are present in groundwater at the Former 724th TPS at concentrations that exceed EPA Region IV ecological screening values (ESVs) for surface water. These chemicals are therefore ecological COPCs for protection of aquatic biota, particularly amphibian species potentially breeding in downgradient surface water bodies. Barium, lead, mercury, and silver are present in groundwater at concentrations greater than their reference background criteria. However, there is some uncertainty about whether they are related to contaminant releases from the site, because they are higher in the upgradient well, MW-1, than in either of the two water table wells near the ditch (MW-2 and MW-3).

Maximum groundwater concentrations of barium, lead, mercury, and benzene do not exceed a published TRV for raccoons potentially ingesting groundwater as surface water; therefore these metals are not of concern for raccoons. There is uncertainty about whether silver or chloromethane are ecological COPCs in groundwater because there are no published TRVs for them, so that they are potentially of concern for raccoons, by default. In addition, silver and chloromethane are higher in the upgradient well and may not be site-related.

In the drainage ditch adjacent to the site, barium, cadmium, lead, mercury, and silver were identified as ecological COPCs in surface water for protection of amphibians breeding in the ditch based on comparison with EPA Region IV ecological screening

values. However, barium, mercury, and silver are present at higher concentrations in groundwater in the upgradient well MW-1 than in surface water in the ditch, and may therefore not be related to contaminant releases from the site. Only cadmium and lead are therefore ecological COPCs in surface water in the ditch.

Barium and silver were identified as ecological COPCs in ditch sediment; but exposure of sediment-dwelling biota to sediment in the drainage ditch was judged to be unlikely. The ditch is an ephemeral surface water body, as shown by the lack of water at SWS-3 at the time of sampling, and is unlikely to support a community of aquatic sediment-dwelling organisms. Exposure of other types of receptors, (e.g., terrestrial animals) to ditch sediment by direct contact and ingestion is likely to be minimal. There are therefore no ecological COPCs in sediment in the ditch.

In Mill Creek, barium, mercury, and silver were identified as ecological COPCs in surface water based on comparison to EPA Region IV ecological screening values. Mercury is the only ecological COPC identified in surface water for protection of terrestrial predators (mink, green heron) in Mill Creek based on comparison to their TRVs. There are no published TRVs for silver, so that there is uncertainty about whether silver is of concern in Mill Creek surface water. In Mill Creek sediment, no ecological COPCs were identified, although there is uncertainty about barium since there are no published ecological screening values for barium, making it a COPC by default. Ecological risks in Mill Creek are not related to the Former 724th TPS for the following reasons:

- As concluded in the fate and transport evaluation, offsite migration of contaminants would be very limited due to retardation and biodegradation, as well as the slow movement of groundwater. Mill Creek is the nearest surface water stream to the Former 724th TPS and is located approximately 1200 feet west of the site. Therefore, migration of contaminants to Mill Creek via groundwater discharge is unlikely and there is no complete pathway from groundwater to ecological receptors in Mill Creek.

- The drainage ditch accepts runoff from the site and the adjacent fuel truck parking area, but is not connected to Mill Creek or its tributaries. Therefore, migration of

contaminants to Mill Creek via surface water runoff is also not likely and there is no complete pathway from the Former 724th TPS to ecological receptors in Mill Creek.

Therefore, based on all the information provided above, and in accordance with various State of Georgia regulations, the former 724th Tanker Purging Station (SWMU 26) must be remediated to the proposed Remedial Levels (RLs) as presented in both the Revised Final Phase II RFI Report (Science Applications International Corporation [SAIC], 1999) and the Final Corrective Action Plan (SAIC, 1999). These RLs, and the maximum observed levels at the site, are presented below:

Table 2. Remedial Levels for Soil and Groundwater, Former 724th Tanker Purging Station, Fort Stewart

Analyte	Soil Remedial Level (µg/kg)	Maximum Observed Level in Soil (µg/kg)	Groundwater Remedial Level (µg/L)	Maximum Observed Level in Groundwater (µg/L)
Arsenic	–	–	–[a]	–
1,1-Dichloroethane	–	–	–[b]	–
1,2-Dichloroethane	–	–	–[b]	–
Acetone	370	1,060	370	1,450
Benzene	20	9,420	5	8,090
Chloroform	–	–	–[a]	–
Chloromethane	–	–	–[b]	–
Ethylbenzene	3,100	27,100	700	2,870
Naphthalene	600	4,160	150[c]	242
Toluene	4,200	27,400	1,000	4,200
Xylenes, total	31,700	124,000	10,000	12,100

– Indicates no remedial action needed for that analyte.

[a] No remedial action is needed for arsenic or chloroform in groundwater since the maximum concentrations for arsenic and chloroform are below their respective maximum contaminant levels (MCLs).

[b] No remedial action is needed for 1,1-dichloroethane, 1,2-dichloroethane, or chloromethane since the maximum concentrations for these analytes during the supplemental groundwater sampling did not exceed their respective MCLs or U.S. Environmental Protection Agency (EPA) Region III risk-based levels.

[c] No MCL exists for naphthalene; the remedial level for naphthalene is based on its EPA Region III risk-based level.

SUMMARY OF CORRECTIVE ACTIONS/TECHNOLOGIES

Based on the previous studies conducted at the site and conclusions regarding nature and extent of contamination, fate and transport, human health risk, and ecological risk, the options presented in Table 3 were evaluated for final remedial action of the identified soil and groundwater contamination.

Table 3. Evaluation of Corrective Actions/Technologies

Action/ Technology	Description	Effectiveness	Implementability	Costs
No Action	The "No Action" alternative provides a baseline against which other actions can be compared. Under the "No Action" alternative, all source units, surface water, and groundwater would be left "as is," without implementing any removal, treatment, or other mitigating actions to reduce existing or potential future exposure.	This alternative would not address remedial response objectives of the site. This alternative does not provide protection of human health or the environment.	There is no implementability involved for this alternative because no action is taken.	There would be no cost associated with the "No Action" alternative
Institutional Controls	Technologies associated with institutional controls will reduce potential hazards by limiting exposure of humans to contaminated soils, surface water, and groundwater. Land use restrictions and institutional control requirements that would be enforced include the following: deed restrictions; zoning controls; and applicable State land use control management systems in effect at the time. Deed restrictions would prohibit any construction at the site that might disturb the soil.	This technology alone would not meet the site objectives (i.e., RLs). Assuming compliance with deed restrictions, this technology should be effective and provide long-term reliability with respect to eliminating human exposure to contaminated media within the boundaries of the site. NOTE-From the Phase II RFI Report, there are no COCs for human health in surface or subsurface soil due to direct contact. In addition, use of surficial groundwater at this site for drinking water is unlikely.	Very few factors limit implementability of the institutional controls. The property is not expected to be developed in the near future and will remain under Federal ownership. This alternative is readily implementable.	Low; to establish deed restrictions, approximately $6,000
Monitored Natural Attenuation	This action would require the monitoring of contaminant levels to ensure that the mass of contamination is being reduced over time. A total of 5 wells would be sampled annually for 20 years and analyzed for BTEX and natural attenuation parameters (e.g., methane).	Natural attenuation of BTEX constituents through biodegradation is known to be occurring at the site and would be effective. However, this action would requira approximately 20 years to successfully meet the site objectives (i.e., RLs).	This alternative is readily implementable and would only require the installation of one new monitoring well and monitoring of a total of 5 wells at the site for approximately 20 years.	High; installation of 1 new well and annual sampling/ monitoring of 5 wells are required for approximately 20 years
Excavation	Excavation involves the removal of "hot spots" of soil contamination. The area of benzene soil contamination greater than 200 g/kg would be removed to the depth of the water table (~6 feet). Approximately 10,930 cubic feet (547 tons) of soil would be removed and disposed of at a RCRA landfill.	Excavation has already proven to be effective in reducing the contamination level in soil at the site.	Excavation is a readily implementable alternative since it would only require excavation equipment, an operator, and disposal.	High; $100 to $200 per ton of unsaturated soil excavated and disposed
Air Sparging	Air sparging involves injecting a gas, usually air, under pressure, into the subsurface to volatilize groundwater contaminants and to promote biodegradation by increasing subsurface oxygen concentrations. Volatilized vapors migrate into the vadose zone where they can be extracted via vacuum, generally by a soil vapor extraction system. At this site, since the depth to groundwater is very shallow (~6 feet), a soil vapor extraction system is not necessary.	Technology proven for light petroleum products such as those present at the site. Air sparging has been used to address a broad range of volatile and semivolatile groundwater and soil contaminants including gasoline and other fuels and associated BTEX components.	Equipment readily available. Compressors and other air injection system components would need to be operated for two or more years. Approximately six injection wells would have to be installed. Monitoring and maintenance of the wells would be required.	Moderate; $20 to $50 per ton of saturated soil (EPA 1995)
Enhanced Bioremediation (Pure Oxygen Injection)	Enhanced biodegradation is the enhancement of one aspect of natural attenuation. The activity of naturally occurring microbes is stimulated by injecting 98 percent pure oxygen to enhance in situ biological degradation of organic contaminants. Nutrients or other additives may be used to encourage the natural biodegradation processes.	Technology proven for site contaminants.	Equipment readily available, applicable to small site. Approximately 40 injection points would have to be installed for this alternative. Bioremediation process may require continuous monitoring and maintenance to prevent plugging of injection wells by microbial growth or mineral precipitation.	Moderate; similar to air sparging based on quote from manufacturer
Enhanced Bioremediation (PHOSter® II)	Similar to pure oxygen injection, the PHOSter® II technology enhances natural attenuation through injection of vapor-phase phosphorous, nitrogen, and air. In soils, enhanced bioremediation using air/nutrient injection is referred to as "bioventing."	PHOSter® II is an innovative technology that has been demonstrated at other sites to be effective for fuels and related BTEX components. Technical performance is highly uncertain due to limited full-scale implementation.	Equipment readily available and applicable to small site. Because this technology is innovative and relative new, there is relatively high uncertainty regarding radius of influence and treatment time required. Longer-term operations may require monitoring to prevent plugging of injection wells by microbial growth or mineral precipitation.	Moderate; similar to enhanced bioremediation using pure oxygen injection; costs dependent on required treatment time
Geo-Cleanse	The Geo-Cleanse Process is an aggressive, pressurized injection of concentrated hydrogen peroxide and ferrous iron catalyst (together known as Fenton's reagent) that generates a hydroxyl free radical that acts as the active oxidizing agent. Oxidation of an organic compound by Fenton's reagent is a rapid and exothermic (heat-producing) reaction.	Expected to provide accelerated performance over air sparging. However, multiple applications may be required to achieve RLs. Chemical oxidation would temporarily destroy the natural bioremediation processes observed at the site.	Geo-Cleanse requires that the depth to contamination be greater than 5 feet BGS. Table 5-3 in the Phase II RFI Report presents values in soil exceeding 100 g/kg in the 4- to 6-foot interval.	High; $100 to $200 per ton of saturated soil; cost would be based on bid price and number of reapplications required

BGS = Below ground surface.
BTEX = Benzene, toluene, ethylbenzene, and total xylenes.
COC = Chemical/contaminant of concern.
RCRA = Resource Conservation and Recovery Act.
RFI = RCRA Facility Investigation.
RL = Remedial level

Based on an evaluation of the corrective actions/technologies presented in Table 3, six (6) alternatives were evaluated further in the Corrective Action Plan. Specifically, each of these alternatives are discussed in Table 1 and provide detailed information on the alternative description, estimated time to implement, estimated cost, and comments. These factors were critical in choosing which alternative to propose for site remediation.

Upon review of all the alternatives, Fort Stewart has proposed to GA EPD in the Corrective Action Plan, that ***Alternative #6: (PHOSter® II Enhanced Bioremediation and Bioventing)*** be implemented at the site.

DECLARATION

The selected remedy is protective of human health and the environment, attains Federal and State requirements that are applicable or relevant and appropriate to this interim remedial action, and is cost-effective. This remedy satisfies the statutory preference for remedies that employ treatment to reduce the mobility of toxic material as a principal element.

Due to the fact that the selected course of action will be implemented in accordance with the Corrective Action Plan, as revised and approved by GA EPD, and all proposed progress reports and confirmatory sampling will be conducted in accordance with the GANTT chart, the five-year review will not apply to this final remedial action.

This decision document was developed by the Directorate of Public Works at Fort Stewart, with support from the U.S. Army Corps of Engineers and SAIC.

HEADQUA

DEPARTMENT OF THE ARMY
3D INFANTRY DIVISION (MECHANIZED) AND FORT STEWART
DIRECTORATE OF PUBLIC WORKS
1557 FRANK COCHRAN DRIVE
FORT STEWART, GEORGIA 31314-4928

July 27, 1999

REPLY TO
ATTENTION OF

Directorate of Public Works

EXPRESS MAIL

Georgia Environmental Protection Division
Attention: Mr. Bruce Khaleghi
205 Butler Street, Southeast
Suite 1154
Atlanta, Georgia 30334

Dear Mr. Khaleghi:

Fort Stewart is pleased to submit four copies of the Corrective Action Plan for the Former 724th Tanker Purging Station (SWMU 26) at Fort Stewart, Georgia dated July 1999, as required by Conditions IV.E.1 and IV.E.2 of the Installation's Hazardous Waste Facility Permit #HW-045 (S&T) dated August 14, 1997.

In accordance with the Federal Code of Regulations, Section 270.11(d), the following certification is provided by the Installation:

> I certify under penalty of law that this document and all attachments were prepared under my direction or supervision in accordance with a system designed to assure that qualified personnel properly gather and evaluate the information submitted. Based on my inquiry of the person or persons who manage the system, or those persons directly responsible for gathering the information, the information is, to the best of my knowledge and belief, true, accurate, and complete. I am aware that there are significant penalties for submitting false information, including the possibility of fine and imprisonment for knowing violations.

Please contact Ms. Melanie Little or Ms. Tressa Rutland, Directorate of Public Works Environmental Branch, at (405) 364-8461 or (912) 767-2010, respectively, should questions arise regarding the enclosed documents.

Sincerely,

Thomas C. Fry 07/27/99
for Ovidio E. Perez
Colonel, U.S. Army
Director, Public Works

Enclosures

Two sets
2/2/99
Hand 99

Georgia Department of Natural Resources

205 Butler Street, S.E., Suite 1162, Atlanta, Georgia 30334
Lonice C. Barrett, Commissioner
Environmental Protection Division
Harold F. Reheis, Director
404/656-2833

January 21, 1999

CERTIFIED MAIL
RETURN RECEIPT REQUESTED

Ovidio E. Perez, Colonel, U.S. Army
Director, Public Works
ATTN: AFZP-DEV (Melanie Little)
Department of the Army
Headquarters, 3D Infantry Division (Mechanized) and Fort Stewart
1557 Frank Cochran Drive
Fort Stewart, GA 31314-4928

RE: Replacement Pages; Revised Final Phase II RCRA Facility Investigation (RFI) Report for the Former 724th Tanker Purging Station [Solid Waste Management Unit (SWMU) 26] dated November 1998; Fort Stewart; EPA ID No. GA9 210 020 872.

Dear Colonel Perez:

The Hazardous Waste Management Branch of the Georgia Environmental Protection Division (GA EPD) is in receipt of Fort Stewart correspondence (Perez to Khaleghi) dated January 20, 1999 which contains Replacement Pages xvii, 6-11, 7-9, 7-11, 7-15, 9-5 and 9-6 to be inserted into the above-referenced document. Based upon our review, GA EPD has determined that:

1. The Phase II RFI Report for SWMU 26 dated November 1998, as amended by the replacement pages referenced in the preceding sentence, is complete; and

2. Corrective action is required at SWMU 26 pursuant to 40 CFR §264.101(a), as referenced by the Rules of Georgia Department of Natural Resources Environmental Protection Division Chapter 391-3-11 Section .10.

In accordance with Conditions IV.E.1 & IV.E.2 in your Hazardous Waste Facility Permit #HW-045(S&T), Fort Stewart must submit a Corrective Action Plan for SWMU 26 to GA EPD within one hundred and twenty (120) days from receipt of this correspondence. Should you have any questions concerning this letter, please contact Brent Rabon or Madeleine Kellam of my staff at (404)656-2833.

Sincerely,

Bruce Khaleghi

Bruce Khaleghi, Unit Coordinator
Hazardous Waste Management Branch

c: Mr. Larry Rogers, GA EPD-Southeast Regional Office
File: Fort Stewart(R)
R:\BRENTR\STEWART\SWMU26\RFIREPOR.APP

DEPARTMENT OF THE ARMY
HEADQUARTERS, 3D INFANTRY DIVISION (MECHANIZED) AND FORT STEWART
Directorate of Public Works
1557 Frank Cochran Drive
Fort Stewart, Georgia 31314-4928

January 20, 1999

REPLY TO
ATTENTION OF

Directorate of Public Works

EXPRESS MAIL

Georgia Environmental Protection Division
Attention: Mr. Bruce Khaleghi
205 Butler Street, Southeast
Suite 1154
Atlanta, Georgia 30334

Dear Mr. Khaleghi:

Fort Stewart is pleased to receive the Georgia Environmental Protection Division's (GA EPD's) correspondence dated January 5, 1999, in reference to the Phase II RCRA Facility Investigation (RFI) Report for the Former 724th Tanker Purging Station [Solid Waste Management Unit (SWMU 26)], dated November 1998; EPA ID No. GA9 210 020 872.

In response to the comments received from GA EPD, Fort Stewart has enclosed four sets of replacement pages for the above referenced report. These pages, with the date of revision annotated adjacent to the page number (bottom center of each page), have been revised as noted below:

Revised Page Number	Revision
Page xvii	Table ES-1; chloroform has been removed as a constituent of concern since the MCL for trihalomethanes [the sum of the concentrations of bromodichloromethane, dibromochloromethane, tribromomethane (bromoform), and trichloromethane (chloroform)] is 100 ug/L. Note: All other trihalomethane constituents were non-detect.
Page 6-11	Table 6.4; the remedial level for xylenes (total) has been revised to be consistent with Table ES-1.
Page 7-9	Table 7.1; the EPA Region III residential value for chromium has been corrected.
Page 7-11	Table 7.2; the MCL for chloroform has been revised to 100 ug/L since the MCL for trihalomethanes [the sum of the concentrations of bromodichloromethane, dibromochloromethane, tribromomethane (bromoform), and trichloromethane (chloroform)] is 100 ug/L and all other trihalomethane constituents were non-detect.
Page 7-15	Table 7.6; the MCL for chloroform has been revised to 100 ug/L and the rationale for removal of chloroform as a constituent of concern has been added to the text and table.
Page 9-6	Table 9.1; the remedial level for xylenes (total) has been revised to be consistent with Table ES-1. In addition, since the MCL for chloroform is 100 ug/L, chloroform has been removed as a constituent of concern for remedial action.

In accordance with the Federal Code of Regulations, Section 270.11(d), the following certification is provided by the Installation:

> I certify under penalty of law that this document and all attachments were prepared under my direction or supervision in accordance with a system designed to assure that qualified personnel properly gather and evaluate the information submitted. Based on my inquiry of the person or persons who manage the system, or those persons directly responsible for gathering the information, the information is, to the best of my knowledge and belief, true, accurate, and complete. I am aware that there are significant penalties for submitting false information, including the possibility of fine and imprisonment for knowing violations.

Please contact Ms. Melanie Little or Ms. Tressa Rutland, Directorate of Public Works Environmental Branch, at (405) 364-8461 or (912) 767-7919, respectively, should questions arise regarding the response to comments and/or the Revised Final RFI Report.

Sincerely,

for Thomas C. Fry 01/20/99
Ovidio E. Perez
Colonel, U.S., Army
Director, Public Works

Enclosures

Table ES-1. Remedial Levels for Soil and Groundwater
Former 724th Tanker Purging Station, Fort Stewart

Analyte	Soil Remedial Level (µg/kg)	Groundwater Remedial Level (µg/L)
Arsenic	-	-[a]
1,1-Dichloroethane	-	-[b]
1,2-Dichloroethane	-	-[b]
Acetone	370	370
Benzene	20	5
Chloroform	-	-[a]
Chloromethane	-	-[b]
Ethylbenzene	3,100	700
Naphthalene	600	150[c]
Toluene	4,200	1,000
Xylenes, total	31,700	10,000

- Indicates no remedial action needed for that analyte.

-[a] No remedial action is needed for arsenic or chloroform in groundwater since the maximum concentrations for arsenic and chloroform are below their respective maximum contaminant levels (MCLs).

-[b] No remedial action is needed for 1,1-dichloroethane, 1,2-dichloroethane, or chloromethane since the maximum concentration for these analytes during the supplemental groundwater sampling did not exceed their respective MCLs or U.S. Environmental Protection Agency (EPA) Region III risk-based levels.

-[c] No MCL exists for naphthalene; the remedial level for naphthalene is based on its EPA Region III risk-based level.

These soil and groundwater remedial levels are protective of direct exposure to residents by hazardous constituents in groundwater or that may leach from the soil to groundwater. However, it is recognized that groundwater is not used at this site as a source of drinking water. It will take approximately 280 years for groundwater to reach the nearest receptor at Mill Creek, which is 1,200 feet from the former facility. Constituents will naturally attenuate in groundwater through retardation and biodegradation before reaching Mill Creek.

This page intentionally left blank

average groundwater concentrations by using dilution factors (DFs). DFs were developed by using the hydraulic analysis method (EPA 1996), which involves calculating the rate of flow through the aquifer system and the rate of rainwater percolating into the aquifer. The rate of percolation (14.7 inches/year) and the groundwater flow velocity (3.6 feet/year) were estimated from the CSM. The zone of mixing within the aquifer was assumed to be 20 feet deep. The site was modeled as a single unsaturated soil layer 7 feet thick. Soil contamination was assumed to cover a total area of 4,500 square feet, with 60 feet parallel to groundwater flow. Using these parameters, the DF was calculated to be 1.33. Geotechnical parameters used by the model are bulk dry density = 1.25 grams/cm^3, disconnectedness index = 10, porosity = 52 percent, and organic carbon content = 0.24 percent. The SESOIL results, showing the predicted maximum groundwater concentrations beneath the site, are presented in Table 6.4.

Soil remedial levels were calculated based on the ratio of the MCL to the predicted maximum groundwater concentration for a given analyte. Because there is no MCL for naphthalene, a risk-based concentration equal to the EPA Region II Risk-Based Criteria was used. The soil remedial level is then calculated by multiplying this ratio by the maximum observed concentration of that analyte in soil at the Former 724th TPS facility. The resulting soil remedial levels, based on leaching from soil to groundwater, are presented in Table 6.4.

Table 6.4. Soil Remedial Levels Based on Leaching to Groundwater
Former 724th Tanker Purging Station; Fort Stewart

CMCOPC	Maximum Soil Concentration (µg/kg)	Target Groundwater Concentration (MCL) (µg/L)	Predicted Maximum Groundwater Concentration (µg/L)	Soil Remedial Level (µg/kg)
Acetone	1,060	370	1,060	370
Benzene	9,420	5	2,320	20
Ethylbenzene	27,100	700	6,210	3,100
Naphthalene	4,160	150[a]	1,040	600
Toluene	27,400	1,000	6,600	4,200
Xylenes	124,000	10,000	39,200	31,700

CMCOPC = contaminant migration constituent of potential concern
[a] - Target groundwater concentration for naphthalene is EPA Region III risk-based level, since no maximum contaminant level exists for naphthalene.

These soil remedial levels are protective of direct exposure to residents by hazardous constituents leaching from the soil to groundwater. However, it is recognized that groundwater is not used at this site as a source of drinking water. It will take approximately 280 years for groundwater to reach the nearest receptor at Mill Creek, which is 1,200 feet from the former facility. Constituents will naturally attenuate in groundwater through retardation and biodegradation before reaching Mill Creek.

This page intentionally left blank

Table 7.1. Contaminant Screening of Surface Soil Results to Action Levels at Former 724th Tanker Purging Station, Fort Stewart

Analyte	Units	Frequency of Detects	Minimum Detect	Maximum Detect	EPA III Residential	HH COPC?	Justification
Chromium	mg/kg	3/3	1.7	6.3	39.0	No	Max Detect < All Screening Criteria
Mercury	mg/kg	2/3	0.05	0.06	2.3	No	Max Detect < All Screening Criteria
Benzo(a)pyrene	mg/kg	1/3	0.0061	0.0061	0.088	No	Max Detect < All Screening Criteria
Benzo(b)fluoranthene	mg/kg	1/3	0.0078	0.0078	0.88	No	Max Detect < All Screening Criteria
Acetone	mg/kg	1/5	0.0266	0.0266	780	No	Max Detect < All Screening Criteria
Benzene	mg/kg	1/5	0.0014	0.0014	22	No	Max Detect < All Screening Criteria
Ethylbenzene	mg/kg	1/5	0.0196	0.0196	780	No	Max Detect < All Screening Criteria
Styrene	mg/kg	1/5	0.0019	0.0019	1,600	No	Max Detect < All Screening Criteria
Toluene	mg/kg	2/5	0.0037	0.0229	1,600	No	Max Detect < All Screening Criteria
Xylenes (total)	mg/kg	1/5	0.141	0.141	16,000	No	Max Detect < All Screening Criteria

EPA – U.S. Environmental Protection Agency
HHCOPC – human health contaminant of potential concern

Table 7.2. Contaminant Screening of Subsurface Soil Results to Action Levels at Former 724th Tanker Purging Station, Fort Stewart

Analyte	Units	Frequency of Detects	Minimum Detect	Maximum Detect	EPA III Industrial (A)	HH COPC?	Justification
Barium	mg/kg	4/4	1.1	13.3	14,000	No	Max Detect < All Screening Criteria
Cadmium	mg/kg	1/4	0.44	0.44	100	No	Max Detect < All Screening Criteria
Chromium	mg/kg	3/4	5.4	12.9	1,000	No	Max Detect < All Screening Criteria
Anthracene	mg/kg	1/4	2.86	2.86	61,000	No	Max Detect < All Screening Criteria
Benzo(a)pyrene	mg/kg	1/4	0.0087	0.0087	0.78	No	Max Detect < All Screening Criteria
Naphthalene	mg/kg	1/4	4.16	4.16	8,200	No	Max Detect < All Screening Criteria
Pyrene	mg/kg	1/4	0.256	0.256	6,100	No	Max Detect < All Screening Criteria
2-Butanone	mg/kg	1/29	0.0051	0.0051	100,000	No	Max Detect < All Screening Criteria
Acetone	mg/kg	12/29	0.0118	1.06	20,000	No	Max Detect < All Screening Criteria
Benzene	mg/kg	8/29	0.0066	9.42	200	No	Max Detect < All Screening Criteria
Ethylbenzene	mg/kg	11/29	0.0025	27.1	20,000	No	Max Detect < All Screening Criteria
Toluene	mg/kg	26/29	0.0015	27.4	41,000	No	Max Detect < All Screening Criteria
Xylenes (total)	mg/kg	11/29	0.0086	124	100,000	No	Max Detect < All Screening Criteria

EPA – U.S. Environmental Protection Agency
HHCOPC – human health contaminant of potential concern

Table 7.3. Contaminant Screening of Groundwater Results to Action Levels at Former 724th Tanker Purging Station, Fort Stewart

Analyte	Units	Frequency of Detects	Minimum Detect	Maximum Detect	EPA Region III Risk-Based (A)	MCL (B)	HH COPC?	Justification
Arsenic	µg/L	2/4	2.5	3.5	0.045	50	Yes	Max Detect >= A
Barium	µg/L	4/4	33.9	99.2	260	2,000	No	Max Detect < All Screening Criteria
Mercury	µg/L	3/4	0.2	0.58	1.1	2	No	Max Detect < All Screening Criteria
Silver	µg/L	3/4	0.51	4.1	18		No	Max Detect < All Screening Criteria
Methane	µg/L	4/4	19.1	4,690	–		No	Max Detect < All Screening Criteria
Naphthalene	µg/L	1/4	10.5	10.5	150		No	Max Detect < All Screening Criteria
1,1-Dichloroethane	µg/L	4/32	2.1	125	81		Yes	Max Detect ≥=A
1,2-Dichloroethane	µg/L	1/32	7.6	7.6	0.12	5	Yes	Max Detect >= AB
2-Butanone	µg/L	1/32	2.8	2.8	190		No	Max Detect < All Screening Criteria
2-Hexanone	µg/L	2/32	3.2	18.4	–		No	Max Detect < All Screening Criteria
Acetone	µg/L	13/28	6.7	1,450	370		Yes	Max Detect >= A
Benzene	µg/L	11/32	1	8,090	0.36	5	Yes	Max Detect >= A
Chloroform	µg/L	2/32	1	1.8	0.15	100	Yes	Max Detect >= A
Chloromethane	µg/L	1/32	27.7	27.7	1.4		Yes	Max Detect >= A
Ethylbenzene	µg/L	9/32	1.4	2,870	130	700	Yes	Max Detect >= A
Methylene chloride	µg/L	3/32	1.8	2.2	4.1	5	No	Max Detect < All Screening Criteria
Toluene	µg/L	5/31	72.6	4,200	75	1,000	Yes	Max Detect >= A
Xylenes, total	µg/L	9/32	1.4	12,100	1200	10,000	Yes	Max Detect >= A

EPA – U.S. Environmental Protection Agency
HHCOPC – human health contaminant of potential concern
MCL – maximum contaminant level; Georgia Safe Drinking Water Act

Table 7.4. Contaminant Screening of Sediment Results to Action Levels at Former 724th Tanker Purging Station, Fort Stewart

Analyte	Units	Results > Detection Limit	Minimum Detect	Maximum Detect	EPA Region Residential (A)	HH COPC?	Justification
Barium	mg/kg	4/4	2.9	29.2	550	No	Max Detect < All Screening Criteria
Chromium	mg/kg	2/4	4	4.4	39	No	Max Detect < All Screening Criteria
Lead	mg/kg	4/4	1.2	6.6	40	No	Max Detect < All Screening Criteria
Mercury	mg/kg	1/4	0.07	0.07	2.3	No	Max Detect < All Screening Criteria
Silver	mg/kg	4/4	0.8	2.6	39	No	Max Detect < All Screening Criteria
Methylene chloride	mg/kg	1/4	0.0026	0.0026	85	No	Max Detect < All Screening Criteria
Toluene	mg/kg	1/4	0.158	0.158	1,600	No	Max Detect < All Screening Criteria
Xylenes (total)	mg/kg	1/4	0.0012	0.0012	16,000	No	Max Detect < All Screening Criteria

[a]Methylene chloride is a common laboratory contaminant and is not considered related to contaminant releases from the Former 724th TPS.
EPA – U.S. Environmental Protection Agency
HHCOPC – human health contaminant of potential concern

7.6 IDENTIFICATION OF REMEDIAL LEVELS

Because there are no human health COPCs for surface soil, subsurface soil, surface water, or sediment, remedial levels were not developed in this section.

Remedial levels for groundwater may include both risk-based concentrations and regulatory levels, such as MCLs. Given that MCLs take into consideration both human health and the limitations of technology to remove contaminants from water, these regulatory levels have been selected for remedial levels for groundwater (Table 7.6). Acetone, 1,1-dichloroethane, and chloromethane did not have MCLs. In the absence of a MCL, the EPA Region III risk-based values for groundwater were used for remedial levels.

The maximum concentration of arsenic (3.5 µg/L) is below its MCL of 50 µg/L (Table 7.6). Similarly, the maximum concentration of chloroform (1.8 µg/L) is below its MCL of 100 µg/L. Therefore remedial action is not required for either arsenic or chloroform.

Table 7.6. Remedial Levels for Chemicals of Concern in Groundwater at Former 724th Tanker Purging Station, Fort Stewart

Analyte	Units	Maximum Detect	MCL	EPA Region III Risk-Based
Arsenic	µg/L	3.5	50	-
1,1-Dichloroethane	µg/L	125	NA	81
1,2-Dichloroethane	µg/L	7.6	5	-
Acetone	µg/L	1,450	NA	370
Benzene	µg/L	8,090	5	-
Chloroform	µg/L	1.8	100	-
Chloromethane	µg/L	27.7	NA	1.4
Ethylbenzene	µg/L	2,870	700	-
Toluene	µg/L	4,200	1,000	-
Xylenes, total	µg/L	12,100	10,000	-

EPA – U.S. Environmental Protection Agency
MCL – maximum contaminant level; Georgia Safe Drinking Water Act
NA – not available

This page intentionally left blank

RCRA metals. Four metals were detected in the groundwater samples, including arsenic, barium, chromium, and mercury. These metals were detected above the reference background criteria and in the same wells as detected during the Phase II RFI sampling in August 1997. None of the metals exceeded their respective MCLs. Silver, which was detected above background in the original Phase II RFI sampling, was not detected above background in the supplemental sampling.

- Arsenic (maximum 16.4 μg/L) was found at its highest concentration in the upgradient well MW-1, and is therefore not considered site related.

- Barium (maximum 87.9 μg/L) and mercury (maximum 0.59 μg/L) were found at concentrations above background in well MW-4, screened at a depth of 35 to 45 feet. In other wells, barium and mercury were found at or below background. Because these metals do not migrate readily and are only present at depth, they are not likely related to any contaminant plume emanating from the facility

- Chromium (maximum 6.1 μg/L) was found in MW-2 at a concentration only slightly above background and marginally higher than that found during the Phase II RFI (2.4 μg/L). Chromium was not detected in any of the other wells in the vicinity of the Former 724th TPS, and was detected at a concentration well below its MCL (100 μg/L) and its EPA Region II risk-based level (180 μg/L). Therefore, no further action is warranted for chromium in groundwater at the facility.

Other analytes. Alkalinity varied between 102 and 321 mg/L (lowest at the upgradient well MW-1 and highest in the deeper well MW-4). Sulfate varied between 0.18 and 11.4 mg/L (lowest at well MW-2 and highest at MW-4). These results are consistent with the results of the Phase II RFI and suggest that biodegradation is occurring, resulting in higher alkalinity and sulfate content in the downgradient wells.

9.4 CONCLUSIONS AND RECOMMENDATIONS

The following conclusions and recommendations have been made based on the results of the Phase II RFI and the supplemental groundwater investigation:

1. Because there are no ecological COPCs at the Former 724th TPS, an ERA is not warranted.

2. Concentrations of metals found during the Phase II RFI are similar to those found during the supplemental sampling. None of the metal concentrations exceed MCLs or EPA Region III risk-based levels. No further corrective action for metals in groundwater is warranted.

3. Free petroleum product was encountered at well MW-2 in the center of the former facility during the supplemental investigation. Free product recovery, which has been undertaken at the site, should be continued.

4. BTEX compounds exceed MCLs in the shallow water table aquifer near the source. There is no evidence that contamination has migrated further beyond the source, despite the presence of free product being discovered. Natural attenuation of organics through biodegradation is

occurring, as suggested by the presence of higher methane, alkalinity, and sulfate in downgradient wells.

5. Due to the presence of free product and BTEX compounds at concentrations in groundwater exceeding MCLs, a CAP will be required to evaluate measures to mitigate the effects of these contaminants. The CAP should evaluate the effectiveness of natural attenuation in remediating VOCs in soil and groundwater by using fate and transport modeling of leaching and biodegradation. The CAP should also address mitigation of naphthalene, which was detected during the supplemental investigation at a concentration exceeding its EPA Region III risk-based level and is likely associated with the free petroleum product.

9.5 IDENTIFICATION OF REMEDIAL LEVELS

Remedial levels are presented in Table 9.1 for soil and groundwater. Soil remedial levels are based on leaching from to groundwater at levels exceeding MCLs or EPA Region III risk-based values. Groundwater remedial levels are based on MCLs, which take into consideration both human health and technological limitations. In the absence of an MCL, the EPA Region III risk-based values for groundwater were used for deriving remedial levels.

Table 9.1. Remedial Levels for Soil and Groundwater
Former 724th Tanker Purging Station, Fort Stewart

Analyte	Soil Remedial Level (µg/kg)	Groundwater Remedial Level (µg/L)
Arsenic	-	-[a]
1,1-Dichloroethane	-	-[b]
1,2-Dichloroethane	-	-[b]
Acetone	370	370
Benzene	20	5
Chloroform	-	-[a]
Chloromethane	-	-[b]
Ethylbenzene	3,100	700
Naphthalene	600	150[c]
Toluene	4,200	1,000
Xylenes, total	31,700	10,000

- Indicates no remedial action needed for that analyte.

-[a] No remedial action is needed for arsenic or chloroform in groundwater since the maximum concentrations for arsenic and chloroform are below their respective maximum contaminant levels (MCLs).

-[b] No remedial action is needed for 1,1-dichloroethane, 1,2-dichloroethane, or chloromethane since the maximum concentration for these analytes during the supplemental groundwater sampling did not exceed their respective MCLs or U.S. Environmental Protection Agency (EPA) Region III risk-based levels.

-[c] No MCL exists for napthalene; the remedial level for naphthalene is based on its EPA Region III risk-based level.

These soil and groundwater remedial levels are protective of direct exposure to residents by hazardous constituents in groundwater or that may leach from the soil to groundwater. However, it is recognized that groundwater is not used at this site as a source of drinking water. It will take approximately 280 years for groundwater to reach the nearest receptor at Mill Creek, which is 1,200 feet from the former facility. Constituents will naturally attenuate in groundwater through retardation and biodegradation before reaching Mill Creek.

ROUTING AND TRANSMITTAL SLIP

1/20/99

TO: (Name, office symbol, room number, building, Agency/Post)	Initials	Date
1. Ch, EWRD		
2.		
3.		
4.		
5.		

✓	Action		File		Note and Return
	Approval		For Clearance		Per Conversation
	As Requested		For Correction		Prepare Reply
	Circulate		For Your Information		See Me
	Comment		Investigate	✓	Signature
	Coordination		Justify		

REMARKS

SWMU 26 (Old Pump Facility)

RFI (Phase II)

Rept. Page.

SCASAP

DO NOT use this form as a RECORD of approvals, concurrences, disposals, clearances, and similar actions

FROM: (Name, org. symbol, Agency/Post)	Room No.—Bldg.
Rick Card	Phone No. 7919

5041-102

OPTIONAL FORM 41 (Rev. 7-76)
Prescribed by GSA
FPMR (41 CFR) 101-11.206

☆ U.S. G.P.O. 1992 312-070/40022

Table ES-1. Remedial Levels for Soil and Groundwater
Former 724th Tanker Purging Station, Fort Stewart

Analyte	Soil Remedial Level (µg/kg)	Groundwater Remedial Level (µg/L)
Arsenic	-	-[a]
1,1-Dichloroethane	-	-[b]
1,2-Dichloroethane	-	-[b]
Acetone	370	370
Benzene	20	5
Chloroform	-	-[a]
Chloromethane	-	-[b]
Ethylbenzene	3,100	700
Naphthalene	600	150[c]
Toluene	4,200	1,000
Xylenes, total	31,700	10,000

- Indicates no remedial action needed for that analyte.

-[a] No remedial action is needed for arsenic or chloroform in groundwater since the maximum concentrations for arsenic and chloroform are below their respective maximum contaminant levels (MCLs).

-[b] No remedial action is needed for 1,1-dichloroethane, 1,2-dichloroethane, or chloromethane since the maximum concentration for these analytes during the supplemental groundwater sampling did not exceed their respective MCLs or U.S. Environmental Protection Agency (EPA) Region III risk-based levels.

-[c] No MCL exists for naphthalene; the remedial level for naphthalene is based on its EPA Region III risk-based level.

These soil and groundwater remedial levels are protective of direct exposure to residents by hazardous constituents in groundwater or that may leach from the soil to groundwater. However, it is recognized that groundwater is not used at this site as a source of drinking water. It will take approximately 280 years for groundwater to reach the nearest receptor at Mill Creek, which is 1,200 feet from the former facility. Constituents will naturally attenuate in groundwater through retardation and biodegradation before reaching Mill Creek.

This page intentionally left blank

average groundwater concentrations by using dilution factors (DFs). DFs were developed by using the hydraulic analysis method (EPA 1996), which involves calculating the rate of flow through the aquifer system and the rate of rainwater percolating into the aquifer. The rate of percolation (14.7 inches/year) and the groundwater flow velocity (3.6 feet/year) were estimated from the CSM. The zone of mixing within the aquifer was assumed to be 20 feet deep. The site was modeled as a single unsaturated soil layer 7 feet thick. Soil contamination was assumed to cover a total area of 4,500 square feet, with 60 feet parallel to groundwater flow. Using these parameters, the DF was calculated to be 1.33. Geotechnical parameters used by the model are bulk dry density = 1.25 grams/cm^3, disconnectedness index = 10, porosity = 52 percent, and organic carbon content = 0.24 percent. The SESOIL results, showing the predicted maximum groundwater concentrations beneath the site, are presented in Table 6.4.

Soil remedial levels were calculated based on the ratio of the MCL to the predicted maximum groundwater concentration for a given analyte. Because there is no MCL for naphthalene, a risk-based concentration equal to the EPA Region II Risk-Based Criteria was used. The soil remedial level is then calculated by multiplying this ratio by the maximum observed concentration of that analyte in soil at the Former 724th TPS facility. The resulting soil remedial levels, based on leaching from soil to groundwater, are presented in Table 6.4.

Table 6.4. Soil Remedial Levels Based on Leaching to Groundwater
Former 724th Tanker Purging Station, Fort Stewart

CMCOPC	Maximum Soil Concentration (µg/kg)	Target Groundwater Concentration (MCL) (µg/L)	Predicted Maximum Groundwater Concentration (µg/L)	Soil Remedial Level (µg/kg)
Acetone	1,060	370	1,060	370
Benzene	9,420	5	2,320	20
Ethylbenzene	27,100	700	6,210	3,100
Naphthalene	4,160	150[a]	1,040	600
Toluene	27,400	1,000	6,600	4,200
Xylenes	124,000	10,000	39,200	31,700

CMCOPC = contaminant migration constituent of potential concern
[a] - Target groundwater concentration for naphthalene is EPA Region III risk-based level, since no maximum contaminant level exists for naphthalene.

These soil remedial levels are protective of direct exposure to residents by hazardous constituents leaching from the soil to groundwater. However, it is recognized that groundwater is not used at this site as a source of drinking water. It will take approximately 280 years for groundwater to reach the nearest receptor at Mill Creek, which is 1,200 feet from the former facility. Constituents will naturally attenuate in groundwater through retardation and biodegradation before reaching Mill Creek.

This page intentionally left blank

Table 7.1. Contaminant Screening of Surface Soil Results to Action Levels at Former 724th Tanker Purging Station, Fort Stewart

Analyte	Units	Frequency of Detects	Minimum Detect	Maximum Detect	EPA III Residential	HH COPC?	Justification
Chromium	mg/kg	3/3	1.7	6.3	39.0	No	Max Detect < All Screening Criteria
Mercury	mg/kg	2/3	0.05	0.06	2.3	No	Max Detect < All Screening Criteria
Benzo(a)pyrene	mg/kg	1/3	0.0061	0.0061	0.088	No	Max Detect < All Screening Criteria
Benzo(b)fluoranthene	mg/kg	1/3	0.0078	0.0078	0.88	No	Max Detect < All Screening Criteria
Acetone	mg/kg	1/5	0.0266	0.0266	780	No	Max Detect < All Screening Criteria
Benzene	mg/kg	1/5	0.0014	0.0014	22	No	Max Detect < All Screening Criteria
Ethylbenzene	mg/kg	1/5	0.0196	0.0196	780	No	Max Detect < All Screening Criteria
Styrene	mg/kg	1/5	0.0019	0.0019	1,600	No	Max Detect < All Screening Criteria
Toluene	mg/kg	2/5	0.0037	0.0229	1,600	No	Max Detect < All Screening Criteria
Xylenes (total)	mg/kg	1/5	0.141	0.141	16,000	No	Max Detect < All Screening Criteria

EPA – U.S. Environmental Protection Agency
HHCOPC – human health contaminant of potential concern

Table 7.2. Contaminant Screening of Subsurface Soil Results to Action Levels at Former 724th Tanker Purging Station, Fort Stewart

Analyte	Units	Frequency of Detects	Minimum Detect	Maximum Detect	EPA III Industrial (A)	HH COPC?	Justification
Barium	mg/kg	4/4	1.1	13.3	14,000	No	Max Detect < All Screening Criteria
Cadmium	mg/kg	1/4	0.44	0.44	100	No	Max Detect < All Screening Criteria
Chromium	mg/kg	3/4	5.4	12.9	1,000	No	Max Detect < All Screening Criteria
Anthracene	mg/kg	1/4	2.86	2.86	61,000	No	Max Detect < All Screening Criteria
Benzo(a)pyrene	mg/kg	1/4	0.0087	0.0087	0.78	No	Max Detect < All Screening Criteria
Naphthalene	mg/kg	1/4	4.16	4.16	8,200	No	Max Detect < All Screening Criteria
Pyrene	mg/kg	1/4	0.256	0.256	6,100	No	Max Detect < All Screening Criteria
2-Butanone	mg/kg	1/29	0.0051	0.0051	100,000	No	Max Detect < All Screening Criteria
Acetone	mg/kg	12/29	0.0118	1.06	20,000	No	Max Detect < All Screening Criteria
Benzene	mg/kg	8/29	0.0066	9.42	200	No	Max Detect < All Screening Criteria
Ethylbenzene	mg/kg	11/29	0.0025	27.1	20,000	No	Max Detect < All Screening Criteria
Toluene	mg/kg	26/29	0.0015	27.4	41,000	No	Max Detect < All Screening Criteria
Xylenes (total)	mg/kg	11/29	0.0086	124	100,000	No	Max Detect < All Screening Criteria

EPA – U.S. Environmental Protection Agency
HHCOPC – human health contaminant of potential concern

Table 7.3. Contaminant Screening of Groundwater Results to Action Levels at Former 724th Tanker Purging Station, Fort Stewart

Analyte	Units	Frequency of Detects	Minimum Detect	Maximum Detect	EPA Region III Risk-Based (A)	MCL (B)	HH COPC?	Justification
Arsenic	µg/L	2/4	2.5	3.5	0.045	50	Yes	Max Detect >= A
Barium	µg/L	4/4	33.9	99.2	260	2,000	No	Max Detect < All Screening Criteria
Mercury	µg/L	3/4	0.2	0.58	1.1	2	No	Max Detect < All Screening Criteria
Silver	µg/L	3/4	0.51	4.1	18		No	Max Detect < All Screening Criteria
Methane	µg/L	4/4	19.1	4,690	–		No	Max Detect < All Screening Criteria
Naphthalene	µg/L	1/4	10.5	10.5	150		No	Max Detect < All Screening Criteria
1,1-Dichloroethane	µg/L	4/32	2.1	125	81		Yes	Max Detect ≥=A
1,2-Dichloroethane	µg/L	1/32	7.6	7.6	0.12	5	Yes	Max Detect >= AB
2-Butanone	µg/L	1/32	2.8	2.8	190		No	Max Detect < All Screening Criteria
2-Hexanone	µg/L	2/32	3.2	18.4	–		No	Max Detect < All Screening Criteria
Acetone	µg/L	13/28	6.7	1,450	370		Yes	Max Detect >= A
Benzene	µg/L	11/32	1	8,090	0.36	5	Yes	Max Detect >= A
Chloroform	µg/L	2/32	1	1.8	0.15	100	Yes	Max Detect >= A
Chloromethane	µg/L	1/32	27.7	27.7	1.4		Yes	Max Detect >= A
Ethylbenzene	µg/L	9/32	1.4	2,870	130	700	Yes	Max Detect >= A
Methylene chloride	µg/L	3/32	1.8	2.2	4.1	5	No	Max Detect < All Screening Criteria
Toluene	µg/L	5/31	72.6	4,200	75	1,000	Yes	Max Detect >= A
Xylenes, total	µg/L	9/32	1.4	12,100	1200	10,000	Yes	Max Detect >= A

EPA – U.S. Environmental Protection Agency
HHCOPC – human health contaminant of potential concern
MCL – maximum contaminant level; Georgia Safe Drinking Water Act

Table 7.4. Contaminant Screening of Sediment Results to Action Levels at Former 724th Tanker Purging Station, Fort Stewart

Analyte	Units	Results > Detection Limit	Minimum Detect	Maximum Detect	EPA Region Residential (A)	HH COPC?	Justification
Barium	mg/kg	4/4	2.9	29.2	550	No	Max Detect < All Screening Criteria
Chromium	mg/kg	2/4	4	4.4	39	No	Max Detect < All Screening Criteria
Lead	mg/kg	4/4	1.2	6.6	40	No	Max Detect < All Screening Criteria
Mercury	mg/kg	1/4	0.07	0.07	2.3	No	Max Detect < All Screening Criteria
Silver	mg/kg	4/4	0.8	2.6	39	No	Max Detect < All Screening Criteria
Methylene chloride	mg/kg	1/4	0.0026	0.0026	85	No	Max Detect < All Screening Criteria
Toluene	mg/kg	1/4	0.158	0.158	1,600	No	Max Detect < All Screening Criteria
Xylenes (total)	mg/kg	1/4	0.0012	0.0012	16,000	No	Max Detect < All Screening Criteria

[a]Methylene chloride is a common laboratory contaminant and is not considered related to contaminant releases from the Former 724th TPS.
EPA – U.S. Environmental Protection Agency
HHCOPC – human health contaminant of potential concern

7.6 IDENTIFICATION OF REMEDIAL LEVELS

Because there are no human health COPCs for surface soil, subsurface soil, surface water, or sediment, remedial levels were not developed in this section.

Remedial levels for groundwater may include both risk-based concentrations and regulatory levels, such as MCLs. Given that MCLs take into consideration both human health and the limitations of technology to remove contaminants from water, these regulatory levels have been selected for remedial levels for groundwater (Table 7.6). Acetone, 1,1-dichloroethane, and chloromethane did not have MCLs. In the absence of a MCL, the EPA Region III risk-based values for groundwater were used for remedial levels.

The maximum concentration of arsenic (3.5 µg/L) is below its MCL of 50 µg/L (Table 7.6). Similarly, the maximum concentration of chloroform (1.8 µg/L) is below its MCL of 100 µg/L. Therefore remedial action is not required for either arsenic or chloroform.

Table 7.6. Remedial Levels for Chemicals of Concern in Groundwater at Former 724th Tanker Purging Station, Fort Stewart

Analyte	Units	Maximum Detect	MCL	EPA Region III Risk-Based
Arsenic	µg/L	3.5	50	-
1,1-Dichloroethane	µg/L	125	NA	81
1,2-Dichloroethane	µg/L	7.6	5	-
Acetone	µg/L	1,450	NA	370
Benzene	µg/L	8,090	5	-
Chloroform	µg/L	1.8	100	-
Chloromethane	µg/L	27.7	NA	1.4
Ethylbenzene	µg/L	2,870	700	-
Toluene	µg/L	4,200	1,000	-
Xylenes, total	µg/L	12,100	10,000	-

EPA – U.S. Environmental Protection Agency
MCL – maximum contaminant level; Georgia Safe Drinking Water Act
NA – not available

This page intentionally left blank

RCRA metals. Four metals were detected in the groundwater samples, including arsenic, barium, chromium, and mercury. These metals were detected above the reference background criteria and in the same wells as detected during the Phase II RFI sampling in August 1997. None of the metals exceeded their respective MCLs. Silver, which was detected above background in the original Phase II RFI sampling, was not detected above background in the supplemental sampling.

- Arsenic (maximum 16.4 μg/L) was found at its highest concentration in the upgradient well MW-1, and is therefore not considered site related.

- Barium (maximum 87.9 μg/L) and mercury (maximum 0.59 μg/L) were found at concentrations above background in well MW-4, screened at a depth of 35 to 45 feet. In other wells, barium and mercury were found at or below background. Because these metals do not migrate readily and are only present at depth, they are not likely related to any contaminant plume emanating from the facility

- Chromium (maximum 6.1 μg/L) was found in MW-2 at a concentration only slightly above background and marginally higher than that found during the Phase II RFI (2.4 μg/L). Chromium was not detected in any of the other wells in the vicinity of the Former 724th TPS, and was detected at a concentration well below its MCL (100 μg/L) and its EPA Region II risk-based level (180 μg/L). Therefore, no further action is warranted for chromium in groundwater at the facility.

Other analytes. Alkalinity varied between 102 and 321 mg/L (lowest at the upgradient well MW-1 and highest in the deeper well MW-4). Sulfate varied between 0.18 and 11.4 mg/L (lowest at well MW-2 and highest at MW-4). These results are consistent with the results of the Phase II RFI and suggest that biodegradation is occurring, resulting in higher alkalinity and sulfate content in the downgradient wells.

9.4 CONCLUSIONS AND RECOMMENDATIONS

The following conclusions and recommendations have been made based on the results of the Phase II RFI and the supplemental groundwater investigation:

1. Because there are no ecological COPCs at the Former 724th TPS, an ERA is not warranted.

2. Concentrations of metals found during the Phase II RFI are similar to those found during the supplemental sampling. None of the metal concentrations exceed MCLs or EPA Region III risk-based levels. No further corrective action for metals in groundwater is warranted.

3. Free petroleum product was encountered at well MW-2 in the center of the former facility during the supplemental investigation. Free product recovery, which has been undertaken at the site, should be continued.

4. BTEX compounds exceed MCLs in the shallow water table aquifer near the source. There is no evidence that contamination has migrated further beyond the source, despite the presence of free product being discovered. Natural attenuation of organics through biodegradation is

occurring, as suggested by the presence of higher methane, alkalinity, and sulfate in downgradient wells.

5. Due to the presence of free product and BTEX compounds at concentrations in groundwater exceeding MCLs, a CAP will be required to evaluate measures to mitigate the effects of these contaminants. The CAP should evaluate the effectiveness of natural attenuation in remediating VOCs in soil and groundwater by using fate and transport modeling of leaching and biodegradation. The CAP should also address mitigation of naphthalene, which was detected during the supplemental investigation at a concentration exceeding its EPA Region III risk-based level and is likely associated with the free petroleum product.

9.5 IDENTIFICATION OF REMEDIAL LEVELS

Remedial levels are presented in Table 9.1 for soil and groundwater. Soil remedial levels are based on leaching from to groundwater at levels exceeding MCLs or EPA Region III risk-based values. Groundwater remedial levels are based on MCLs, which take into consideration both human health and technological limitations. In the absence of an MCL, the EPA Region III risk-based values for groundwater were used for deriving remedial levels.

Table 9.1. Remedial Levels for Soil and Groundwater
Former 724th Tanker Purging Station, Fort Stewart

Analyte	Soil Remedial Level (µg/kg)	Groundwater Remedial Level (µg/L)
Arsenic	-	-[a]
1,1-Dichloroethane	-	-[b]
1,2-Dichloroethane	-	-[b]
Acetone	370	370
Benzene	20	5
Chloroform	-	-[a]
Chloromethane	-	-[b]
Ethylbenzene	3,100	700
Naphthalene	600	150[c]
Toluene	4,200	1,000
Xylenes, total	31,700	10,000

- Indicates no remedial action needed for that analyte.

-[a] No remedial action is needed for arsenic or chloroform in groundwater since the maximum concentrations for arsenic and chloroform are below their respective maximum contaminant levels (MCLs).

-[b] No remedial action is needed for 1,1-dichloroethane, 1,2-dichloroethane, or chloromethane since the maximum concentration for these analytes during the supplemental groundwater sampling did not exceed their respective MCLs or U.S. Environmental Protection Agency (EPA) Region III risk-based levels.

-[c] No MCL exists for napthalene; the remedial level for naphthalene is based on its EPA Region III risk-based level.

These soil and groundwater remedial levels are protective of direct exposure to residents by hazardous constituents in groundwater or that may leach from the soil to groundwater. However, it is recognized that groundwater is not used at this site as a source of drinking water. It will take approximately 280 years for groundwater to reach the nearest receptor at Mill Creek, which is 1,200 feet from the former facility. Constituents will naturally attenuate in groundwater through retardation and biodegradation before reaching Mill Creek.

Georgia Departme of Natural Resources
205 Butler Street, S.E., Suite 1162, Atlanta, Georgia 30334
Lonice C. Barrett, Commissioner
Environmental Protection Division
Harold F. Rehels, Director
404/656-2833

January 5, 1999

CERTIFIED MAIL
RETURN RECEIPT REQUESTED

Ovidio E. Perez, Colonel, U.S. Army
Director, Public Works
FOR: ATTN: AFZP-DEV (Melanie Little)
Department of the Army
Headquarters, 3D Infantry Division (Mechanized) and Fort Stewart
1557 Frank Cochran Drive
Fort Stewart, GA 31314-4928

RE: Phase II RCRA Facility Investigation (RFI) Report for the Former 724th Tanker Purging Station [Solid Waste Management Unit (SWMU) 26] dated November 1998; Fort Stewart; EPA ID No. GA9 210 020 872.

Dear Colonel Perez:

The Hazardous Waste Management Branch of the Georgia Environmental Protection Division (GA EPD) has reviewed the above-referenced document and generated the following comments.

1. Fort Stewart has done an excellent job in responding to the GA EPD comments on the previous version of this report [See correspondences (Khaleghi to Perez) dated September 24, 1998 and (Perez to Khaleghi) dated November 24, 1998 for additional information]. We continue to appreciate the efforts of Ms. Melanie Little of your staff in ensuring the products submitted to GA EPD which are designed to satisfy the corrective action requirements of your Hazardous Waste Facility Permit #HW-045(S&T) are of exceptionally good quality.

2. The Soil Remedial Level (RL) for Xylenes (Total), in Table ES-1 on page xvii, should be modified to be consistent with the RLs for this hazardous constituent found in Tables 6.4 (page 6-11) and 9.1 (page 9-6).

3. The Georgia Safe Drinking Water Act Maximum Contaminant Level (MCL) for trihalomethanes [the sum of the concentrations of bromodichloromethane, dibromochloromethane, tribromomethane (bromoform) and trichloromethane (chloroform)] is 100 µg/L; please modify the MCL identified for chloroform in Tables ES-1 (page xvii), 7.6 (page 7-15) and 9.1 (page 9-6) appropriately.

The revision for the SWMU 26 RFI Report, appropriately addressing the last two (2) comments above, must be submitted within sixty (30) days of receipt of this correspondence in the form of revised pages with appropriate page numbers and the date revised, e.g., Page 6 (Revised 01/15/99). Note that four (4) copies of the revised pages are required to be submitted to GA EPD. Should you have any questions concerning this correspondence, please contact Brent Rabon or Madeleine Kellam of my staff at (404)656-2833.

Sincerely,

Bruce Khaleghi, Unit Coordinator
Hazardous Waste Management Branch

c: Mr. Larry Rogers, GA EPD-Southeast Regional Office
File: Fort Stewart(R)
R:\BRENTR\STEWART\SWMU26\RFIREPT2.COM

DEPARTMENT OF THE ARMY
HEADQUARTERS, 3D INFANTRY DIVISION (MECHANIZED) AND FORT STEWART
Directorate of Public Works
1557 Frank Cochran Drive
Fort Stewart, Georgia 31314-4928

Express Mailed
11/24/98

REPLY TO
ATTENTION OF

NOV 24 1998

Directorate of Public Works

CERTIFIED MAIL

Georgia Environmental Protection Division
Attention: Mr. Bruce Khaleghi
205 Butler Street, Southeast
Suite 1162
Atlanta, Georgia 30334

Dear Mr. Khaleghi:

Fort Stewart is pleased to receive the Georgia Environmental Protection Division's (GA EPD) correspondence dated September 24, 1998, in reference to the Final Phase II RCRA Facility Investigation (RFI) Report for the Former 724th Tanker Purging Station [Solid Waste Management Unit (SWMU) 26], dated March 1998; Fort Stewart; EPA ID No. GA9 210 020 872.

In response to the comments received from GA EPD, Fort Stewart has revised the RFI report and enclosed four copies of the Revised Final Phase II RCRA Facility Investigation Report for the Former 724th Tanker Purging Station [Solid Waste Management Unit (SWMU) 26], dated November 1998. Fort Stewart agrees to comply with the comments listed in the referenced correspondence with the exception of Comment #11 (Toxicity Profiles are enclosed under Appendix I rather than in Section 7.0 for informational purposes). A formal response to comments table is provided as an enclosure (i.e., within the front pocket of each Revised Final RFI Report).

In accordance with the Federal Code of Regulations, Section 270.11(d), the following certification is provided by the Installation:

> I certify under penalty of law that this document and all attachments were prepared under my direction or supervision in accordance with a system designed to assure that qualified personnel properly gather and evaluate the information submitted. Based on my inquiry of the person or persons who manage the system, or those persons directly responsible for gathering the information, the information is, to the best of my knowledge and belief, true, accurate, and complete. I am aware that there are significant penalties for submitting false information, including the possibility of fine and imprisonment for knowing violations.

Please contact Ms. Melanie Little or Ms. Tressa Rutland, Directorate of Public Works Environmental Branch, at (405) 364-8461 or (912) 767-7919, respectively, should questions arise regarding the response to comments and/or the Revised Final Phase II RFI Report.

Sincerely,

for Dale F. Kiefer

Ovidio E. Perez
Colonel, U.S., Army
Director, Public Works

Enclosures

AFZP-PWV-E (200-1a) 30 SEPT 98

MEMORANDUM FROM ENRD ENV BR

MEMORANDUM FOR PMB

SUBJECT: IJO#V0-481-5J, Remediate Purge Facility

1. Under an on-going Resource Conservation Recovery Act (RCRA) Facility Investigation (RFI), free product was identified in one of the monitoring wells at the former Purge Facility (located behind the parking facility adjacent to the Bldg 1840 Motorpool).

2. As required under RCRA, this free product must be actively removed immediately.

3. This investigation is being conducted under contract with Science Applications International Corporation (SAIC) through the Savannah District Corps of Engineers.

4. A "ferret" system is currently located at Evans Field used at the Bulk Fuels Facility to recover free product discovered under a RFI investigation of this facility. This system is no longer required at that facility and will be moved to the former Purge Facility to actively remove the free product identified in Monitoring Well No.2 (MW-02).

5. However, the system requires an electrical feed. Two power poles currently exist at the facility (see attached drawing for approximate locations) which could be tapped into to provide this feed.

6. As discussed with Ms. Bobbie Smith earlier this morning, a service order can not be placed to install a receptacle (120V) near MW-02 off the adjacent power pole.

7. Please advise the undersigned or Ms. Tressa Rutland ASAP (767-2010/1078/7919) what steps must be taken to ensure this work is completed prior to 19 Oct 98.

8. Your assistance in expediting this request is appreciated.

Thomas C. Fry
THOMAS C. FRY
CH, ENRD ENV BR

encls

REVISED FINAL

PHASE II RCRA FACILITY INVESTIGATION REPORT
for the
FORMER 724th TANKER PURGING STATION (SWMU 26)
at
FORT STEWART, GEORGIA

PREPARED FOR

US Army Corps of Engineers®

SAVANNAH DISTRICT

CONTRACT No. DACA21-95-D-0022
DELIVERY ORDER 0007

November 1998

96-053MS(TPS/FIR)/111098

9.0 CONCLUSIONS AND RECOMMENDATIONS

9.1 SUMMARY OF FINDINGS

The RFI presented in this report was conducted to collect additional analytical data for determining the nature and extent of contamination in environmental media in the vicinity of the Former 724th TPS. The data were derived from a series of screening and primary samples collected from surface and subsurface soils, sediments, surface water, and groundwater in the study area. The samples collected were analyzed for a number of COPCs, including metals, VOCs, and SVOCs.

Results of these analyses indicated that soils at the site contain elevated levels of VOCs, predominantly BTEX, PAHs, and metals, including cadmium, chromium, and mercury. Sediments revealed elevated concentrations of VOCs like methylene chloride, toluene, and xylene, and metals including barium, chromium, lead, mercury, and silver. Surface waters indicated the presence of metals including arsenic, cadmium, lead, and silver, but no organics. Groundwater samples showed evidence of fuel-related contaminants and organic solvents such as naphthalene, BTEX, 1,1-dichloroethane, 1,2-dichloroethane, chloroform, chloromethane, methylene chloride, styrene, 2-butanone, 2-hexanone, and acetone. Metals detected in groundwater included arsenic, barium, mercury, and silver.

The following summarizes the significant findings of Phase II RFI sampling and analysis:

- Contamination is present in both soil and groundwater at the site, dominated by BTEX compounds, with secondary contaminants such as 1,1-dichloroethane.

- BTEX contamination in soil extends to the water table (approximately 6 feet deep) and is greatest immediately north and east of the area of excavated soils removed in August 1996. The soil contamination covers an area approximately 60 by 75 feet.

- BTEX contamination in groundwater extends to a depth of approximately 20 feet below the water table, although isolated areas of BTEX were found in groundwater to depths up to 40 feet. The BTEX contamination covers a plume area approximately 100 feet wide by 160 feet long, extending from the Former 724th TPS facilities to the north and west.

- The leading edge of the BTEX plume is more than 1,000 feet from Mill Creek and is, therefore, not impacting Mill Creek. Contamination in Mill Creek is not related to the Former 724th TPS.

- Biodegradation of the VOCs is likely occurring, as evidenced by the presence of methane, a breakdown product of BTEX degradation.

- Some metals are present in soil and groundwater at the facility in the swale immediately west of the site; no consistent pattern of distribution across media is apparent.

9.2 CONCLUSIONS

Several assessments were conducted to determine the significance of the contaminant concentrations found at the Former 724th TPS with respect to their impact on human health and the environment. The assessments included:

- A contaminant fate and transport analysis (Section 6.0) which provided an assessment of the potential migration pathways and transport mechanisms affecting the chemical compounds found at the site.

- A human health risk assessment (Section 7.0) which employed a Step 1 risk evaluation to determine potential human health risks associated with the COPCs.

- An ecological risk assessment (Section 8.0) which provided a Phase 1 preliminary risk evaluation for terrestrial and aquatic habitats in the study area.

The following summarizes the conclusions regarding contaminant fate and transport:

- Metals are not considered contaminant migration COPCs, mainly due to their low concentrations in the soils.

- Organics in the site soils that exceed EPA GSSLs and are, therefore, of concern for leaching from soils to groundwater, include BTEX, acetone, and naphthalene. These organics, except naphthalene, due to their high mobility, have already reached the groundwater. However, groundwater movement off site is very slow (3.6 feet/year) and may take 280 years to reach the receptor location (i.e., Mill Creek).

- The organic compounds that are currently observed above their respective MCLs in groundwater are BTEX and acetone. Based on the site conceptual model, although these contaminants may have been leaching (and may continue to leach in the future) from the contaminated soils into the groundwater beneath the site with concentrations above their MCLs, off-site migration of these constituents will be limited due to retardation and biodegradation as well as the slow movement of groundwater flow. Benzene will degrade to a concentration less than its MCL in 22 years, having traveled less than 80 feet from the source. Similarly, ethylbenzene, toluene, xylene, and acetone with higher biodegradation rates will remain at concentrations much lower than benzene. Therefore, none of the constituents from the Former 724th TPS site are expected to be of potential concern at the nearest receptor location [i.e., Mill Creek (1,200 feet from the former facility)].

The following summarizes the conclusion of the human health risk assessment:

- Based on the results of the screening and the weight-of-evidence analysis, potential COPCs have been identified for groundwater. There are no COPCs for surface soils, subsurface soils, surface water, or sediment.

- The initial COPCs for groundwater were identified because they present a potential threat to human health as a result of using groundwater as a source of drinking water. The initial COPCs for groundwater are acetone, arsenic, 1,2-dichloroethane, chloroform, chloromethane, and BTEX.

- It should be noted that given the shallow depth of the surficial aquifer and the presence of the deeper Principal Artesian aquifer, a common source of drinking water throughout the region, the use of the surficial aquifer is not considered to be a viable exposure scenario. Drinking water screening values were used in the absence of more appropriate values.

The following summarizes the conclusions of the ecological risk assessment:

- Chromium was the only chemical detected in surface soil at the former 724th TPS at a concentration that exceeded both reference background criteria and a TRV for an ecological receptor (robin). There is uncertainty about whether earthworms from the Former 724th TPS will constitute 20 percent or more of the diet of robins foraging at the site. Thus, robins are unlikely to be at risk from chromium in surface soil.

- There is uncertainty about whether ethylbenzene, benzo(b)flouranthene, and styrene are ecological COPCs in surface soil because no TRVs can be derived for these substances. Benzo(b)flouranthene and styrene were not present in surface soil at the site, but were detected only at MW-5 (adjacent to Mill Creek) at concentrations near their detection limit, and are therefore not site related. Ethylbenzene was detected in surface soil at MW-2 and is related to former releases at the site. However, ethylbenzene in surface soil is unlikely to pose a risk to ecological receptors given the low concentration (0.02 mg/kg) relative to the proposed TRV for ethylbenzene of 8.4 mg/kg, which is one-tenth the TRV for total xylenes. There are, therefore, no ecological COPCs in surface soil.

- Barium and silver were identified as ecological COPCs in sediment in the drainage swale, but exposure of sediment-dwelling biota to sediment in the swale was judged to be unlikely. The swale is an ephemeral surface water body, as shown by the lack of water at SWS-3 at the time of sampling, and is unlikely to support a community of aquatic sediment-dwelling organisms. Exposure of other types of receptors (e.g., terrestrial animals) to swale sediment by direct contact and ingestion is likely to be minimal. There are, therefore, no ecological COPCs in sediment in the swale.

- Cadmium, lead, and silver were detected in surface water in the drainage swale at the Former 724th TPS at concentrations that exceed reference background criteria and also exceed EPA Region 4 ESVs for aquatic biota. However, there are no aquatic biota or other ecological receptors of concern in the man-made swale. Maximum surface water concentrations of cadmium and lead do not exceed a published TRV for terrestrial receptors (raccoons) and are therefore not of concern. There is uncertainty about whether silver is of concern because there is no published TRV for silver. There are, therefore, no ecological COPCs in surface water in the swale.

- Barium, mercury, silver, benzene, and chloromethane are present in groundwater at the Former 724th TPS at concentrations that exceed reference background criteria and also EPA Region 4 ESVs for surface water. However, there are no aquatic biota or other ecological receptors of concern in the man-made swale. Maximum groundwater concentrations of barium, mercury, and benzene do not exceed a published TRV for terrestrial receptors (raccoons) potentially ingesting groundwater as surface water; therefore, these metals are not of concern for raccoons. There is uncertainty about whether silver or chloromethane are ecological COPCs in groundwater because there are no published TRVs for them. However,

silver and chloromethane are higher in the upgradient well and are not considered site related. There are, therefore, no ecological COPCs in groundwater at the site.

- In Mill Creek, mercury was identified as an ecological COPC in surface water based on comparison to EPA Region 4 ESVs. Mercury is also an ecological COPC in surface water for protection of terrestrial predators (mink, green heron) in Mill Creek based on comparison to their TRVs. In Mill Creek sediment, no ecological COPCs were identified, although there is uncertainty about barium, since there are no published values for barium. Migration of contaminants to Mill Creek from the 724th TPS is unlikely either via groundwater discharge or via surface water runoff. There is no complete pathway from the Former 724th TPS to ecological receptors in Mill Creek. Therefore, ecological risks in Mill Creek are not related to the Former 724th TPS.

9.3 SUPPLEMENTAL PHASE II GROUNDWATER CHARACTERIZATION

Based upon the results of the original Phase II RFI at the Former 724th TPS, a supplemental characterization was conducted in September 1998 to verify concentrations of metals in groundwater and to provide further evidence that natural attenuation of VOCs is occurring. The scope of work included sampling of the four onsite monitoring wells (MW-1 through MW-4) and analyzing the samples for VOCs, PAHs, RCRA metals, and water quality parameters. Results of this supplemental investigation are presented in Appendix H, and summarized below.

VOCs. Seven individual VOCs were detected in groundwater samples. BTEX compounds were detected only in a single well, MW-2, which is screened at the water table and located in the center of the former facility (i.e., the identified source). During sampling, approximately 1.9 feet of free petroleum product were encountered in MW-2; no free product had been encountered in any of the direct-push groundwater samples or any of the wells during the Phase II RFI in August 1997. Once free product was discovered, a ferret system was installed in MW-2 for recovery of the free product; operation of the ferret system is ongoing.

Benzene (1,350 µg/L), ethylbenzene (477 µg/L), toluene (1,540 µg/L), and total xylenes (2,350 µg/L) were reported in MW-2. The concentrations of benzene and toluene exceeded their respective MCLs of 5 µg/L and 1,000 µg/L. No BTEX constituent was found in any of the other wells, confirming the Phase II RFI conclusions that contaminants have not migrated vertically or laterally from the source at the former facility.

The other VOCs that were detected included chloroform (18.7 µg/L at MW-2), 1,1-dichloroethane (1.4 µg/L at MW-3), and 2-hexanone (6.7 µg/L at MW-3). Chloroform and 2-hexanone are common laboratory contaminants and were not detected in these wells during the Phase II RFI, and are therefore not likely a result of contaminant releases from the former facility. 1,1-Dichloroethane was detected in MW-3 during the Phase II RFI at a concentration of 2.2 µg/L, and is considered a secondary contaminant within the primary BTEX plume.

PAHs. Naphthalene was the only PAH compound detected in groundwater. Naphthalene was reported at 242 µg/L at MW-2, which exceeds its EPA Region III risk-based criterion of 150 µg/L. Naphthalene was also detected in MW-2 during the Phase II RFI. The increase in the concentration of naphthalene is likely due to the presence of the free product found during the supplemental sampling.

RCRA metals. Four metals were detected in the groundwater samples, including arsenic, barium, chromium, and mercury. These metals were detected above the reference background criteria and in the same wells as detected during the Phase II RFI sampling in August 1997. None of the metals exceeded their respective MCLs. Silver, which was detected above background in the original Phase II RFI sampling, was not detected above background in the supplemental sampling.

- Arsenic (maximum 16.4 μg/L) was found at its highest concentration in the upgradient well MW-1, and is therefore not considered site related.

- Barium (maximum 87.9 μg/L) and mercury (maximum 0.59 μg/L) were found at concentrations above background in well MW-4, screened at a depth of 35 to 45 feet. In other wells, barium and mercury were found at or below background. Because these metals do not migrate readily and are only present at depth, they are not likely related to any contaminant plume emanating from the facility

- Chromium (maximum 6.1 μg/L) was found in MW-2 at a concentration only slightly above background and marginally higher than that found during the Phase II RFI (2.4 μg/L). Chromium was not detected in any of the other wells in the vicinity of the Former 724th TPS, and was detected at a concentration well below its MCL (100 μg/L) and its EPA Region II risk-based level (180 μg/L). Therefore, no further action is warranted for chromium in groundwater at the facility.

Other analytes. Alkalinity varied between 102 and 321 mg/L (lowest at the upgradient well MW-1 and highest in the deeper well MW-4). Sulfate varied between 0.18 and 11.4 mg/L (lowest at well MW-2 and highest at MW-4). These results are consistent with the results of the Phase II RFI and suggest that biodegradation is occurring, resulting in higher alkalinity and sulfate content in the downgradient wells.

9.4 CONCLUSIONS AND RECOMMENDATIONS

The following conclusions and recommendations have been made based on the results of the Phase II RFI and the supplemental groundwater investigation:

1. Because there are no ecological COPCs at the Former 724th TPS, an ERA is not warranted.

2. Concentrations of metals found during the Phase II RFI are similar to those found during the supplemental sampling. None of the metal concentrations exceed MCLs or EPA Region III risk-based levels. No further corrective action for metals in groundwater is warranted.

3. Free petroleum product was encountered at well MW-2 in the center of the former facility during the supplemental investigation. Free product recovery, which has been undertaken at the site, should be continued.

4. BTEX compounds exceed MCLs in the shallow water table aquifer near the source. There is no evidence that contamination has migrated further beyond the source, despite the presence of free product being discovered. Natural attenuation of organics through biodegradation is

occurring, as suggested by the presence of higher methane, alkalinity, and sulfate in downgradient wells.

5. Due to the presence of free product and BTEX compounds at concentrations in groundwater exceeding MCLs, a CAP will be required to evaluate measures to mitigate the effects of these contaminants. The CAP should evaluate the effectiveness of natural attenuation in remediating VOCs in soil and groundwater by using fate and transport modeling of leaching and biodegradation. The CAP should also address mitigation of naphthalene, which was detected during the supplemental investigation at a concentration exceeding its EPA Region III risk-based level and is likely associated with the free petroleum product.

9.5 IDENTIFICATION OF REMEDIAL LEVELS

Remedial levels are presented in Table 9.1 for soil and groundwater. Soil remedial levels are based on leaching from to groundwater at levels exceeding MCLs or EPA Region III risk-based values. Groundwater remedial levels are based on MCLs, which take into consideration both human health and technological limitations. In the absence of an MCL, the EPA Region III risk-based values for groundwater were used for deriving remedial levels.

Table 9.1. Remedial Levels for Soil and Groundwater
Former 724th Tanker Purging Station, Fort Stewart

Analyte	Soil Remedial Level (µg/kg)	Groundwater Remedial Level (µg/L)
Arsenic	-	-[a]
1,1-Dichloroethane	-	-[b]
1,2-Dichloroethane	-	-[b]
Acetone	370	370
Benzene	20	5
Chloroform	-	0.1
Chloromethane	-	-[b]
Ethylbenzene	3,100	700
Naphthalene	600	150[c]
Toluene	4,200	1,000
Xylenes, total	3,200	10,000

- Indicates no remedial action needed for that analyte.

-[a] No remedial action is needed for arsenic in groundwater since the maximum concentration for arsenic is below its maximum contaminant level (MCL).

-[b] No remedial action is needed for 1,1-dichloroethane, 1,2-dichloroethane, or chloromethane since the maximum concentration for these analytes during the supplemental groundwater sampling did not exceed their respective MCLs or U.S. Environmental Protection Agency (EPA) Region III risk-based levels.

-[c] No MCL exists for napthalene; the remedial level for naphthalene is based on its EPA Region III risk-based level.

These soil and groundwater remedial levels are protective of direct exposure to residents by hazardous constituents in groundwater or that may leach from the soil to groundwater. However, it is recognized that groundwater is not used at this site as a source of drinking water. It will take approximately 280 years for groundwater to reach the nearest receptor at Mill Creek, which is 1,200 feet from the former facility. Constituents will naturally attenuate in groundwater through retardation and biodegradation before reaching Mill Creek.

S: 2Dec 98

Georgia Department of Natural Resources

205 Butler Street, S.E., Suite 1162, Atlanta, Georgia 30334
Lonice C. Barrett, Commissioner
Environmental Protection Division
Harold F. Reheis, Director
404/656-2833

September 24, 1998

Received to ENRD: 02 OCT 1998

CERTIFIED MAIL
RETURN RECEIPT REQUESTED

S: 2 Dec 98

Ovidio E. Perez, Colonel, U.S. Army
Director, Public Works
ATTN: AFZP-DEV (Melanie Little)
Department of the Army
Headquarters, 3D Infantry Division (Mechanized) and Fort Stewart
1557 Frank Cochran Drive
Fort Stewart, GA 31314-4928

RE: Phase II RCRA Facility Investigation (RFI) Report for the Former 724th Tanker Purging Station [Solid Waste Management Unit (SWMU) 26] dated March 1998; Fort Stewart; EPA ID No. GA9 210 020 872.

Dear Colonel Perez:

The Hazardous Waste Management Branch of the Georgia Environmental Protection Division (GA EPD) has reviewed the above-referenced document and generated the following comments.

General Comments

1. Given that Fort Stewart has proposed remediating subsurface soils and groundwater at SWMU 26 to risk-based cleanup criteria, the Recommendations Sections on pages xv and 9-4 should be amended to state that Remedial Levels (RLs) are calculated and presented in a revised Section 7.0 (Human Health Risk Assessment). Please note that calculation and presentation of RLs in a Corrective Action Plan (CAP), as proposed by Fort Stewart, is inconsistent with Section III.1.c (page 6) of the *GA EPD Guidance for Selecting Media Remediation Levels at RCRA Solid Waste Management Units dated November 1996.*

2. In a conversation between Brent Rabon and Melanie Little on September 16, 1998, Fort Stewart proposed including the groundwater analytical results from subsequent sampling of the permanent monitoring wells at SWMU 26 in the revised RFI Report (Also see the third bullets of the Recommendations Sections on pages xv and 9-4). GA EPD concurred with this proposal and agreed to provide an extended time period for Fort Stewart to respond to these comments and sample the permanent monitoring wells; please include the referenced groundwater analytical results in the revised SWMU 26 RFI Report.

Specific Comments

Section 5.0 - Contaminant Nature and Extent

3. The discussion of the background data set, in Section 5.1, should be revised to more clearly describe the rationale for utilizing environmental media samples from multiple SWMUs, giving particular attention to soil types and the turbidity of groundwater samples. Please also include the following information in a revised Section 5.1 or Appendix F:

   (a) a complete set of the background data analytical results (i.e., the "minimum detection/maximum detection" approach used to present background data in Appendix F is insufficient); and

   (b) a map indicating the locations of environmental media samples.

   Please note that Fort Stewart (1) should properly reference the supporting documentation to source documents (e.g., RFI Reports) and (2) may limit the determination of background values to inorganic hazardous constituents per your discretion.

4. If background values for surface soil, subsurface soil, and groundwater were all obtained from a borehole which later became a monitoring well; then the revised text in Section 5.1 should explicitly state that the samples were collected from the same borehole. The table in the center of page 5-1, as written, appears to indicate as much; but it is left to the reader to infer that this is the case.

5. The Georgia Safe Drinking Water Act Maximum Contaminant Levels (MCLs) reported in Table 5.5 (page 5-19) are inconsistent with the units listed (i.e., µg/L); modify the table appropriately. In addition, modify Table 5.5 to indicate that the MCL for selenium is 50 µg/L.

Section 7.0 - Human Health Risk Assessment

6. Fort Stewart should note that utilizing an Upper Tolerance Level (UTL), as proposed in Section 7.1.2 (page 7-2), is generally not an acceptable statistical method to determine background concentrations of hazardous constituents in soils because the UTL is designed to contain a designated proportion of the measurements, rather than on a particular parameter (e.g., median). It describes the likelihood that *a portion* of the measurements (e.g., 95 percent) will fall within a specific interval (e.g., 90th percentile). The UTL is very effective in evaluating groundwater data and not soil data; because it is designed to compare

compliance data to background or a regulatory standard (e.g., MCL) due to the fluctuations commonly observed in groundwater sampling.

However, GA EPD will accept the proposed UTL method because Fort Stewart has chosen to utilize the maximum detected concentration (with the proposed tolerance and confidence limits) if the UTL is greater than the maximum.

7. In order to utilize the two times the mean background approach in the screening section of a risk assessment, the background data set should be normally distributed and limited to inorganics. Please confirm and/or modify Section 7.1.2 (page 7-2) where applicable.

8. Please note that GA EPD does not recognize, for screening purposes in a risk assessment, the mean metals concentrations for soils in the eastern United States generated by United States Geologic Survey (USGS) [See Section 7.1.2 (page 7-2) and Appendix F]. Fort Stewart is free, however, to continue using the USGS data set for comparative purposes per your discretion. No modification of the report is required.

9. Fort Stewart should screen arsenic utilizing the carcinogen risk-based value in Section 7.3 for all environmental media. The use of the arsenic carcinogenic and noncarcinogenic toxicity values based upon exposure duration not only serves to reduce the quantifiable estimate of the risk influenced by arsenic but is not logical based upon the approach outlined by U.S. EPA[1]. The approach for carcinogens is based upon the assumption that a high dose received over a short period of time is equal in toxicity to a low dose received over a long period of time. The toxicological characteristics of the noncarcinogenic chemicals may be expressed as either chronic (i.e., 7 - 30 years), subchronic (i.e., 2 weeks to 7 years), or developmental (i.e., a day or a single exposure event) reference doses[2].

10. In a revised Section 7.0, please adjust the Region III Risk-Based Concentrations hazard quotient values from 1 to 0.1[3].

11. Information on the toxicity of the Constituents of Concern (COCs) needs to be gathered and summarized in a Toxicity Profiles subsection within Section 7.0 (or in a referenced Appendix). Information such as the weight of evidence for carcinogens, toxicity endpoints,

---

[1]1986. U.S. EPA. *Guidelines for Carcinogen Risk Assessment.* 51 *Federal Register 33992*

[2]1989. U.S. EPA. *Risk Assessment Guidance for Superfund, Volume 1, Human Health Evaluation Manual (Part A).* EPA/540/1-89/002.

[3]1996. U.S. EPA. *Supplemental Guidance to RAGS: Region 4 Bulletins.*

how the numerical toxicity factors were developed, and a list of literature references (e.g., IRIS, HEAST, etc.) should be included in the profile for each chemical.

12. Section 7.0 should be revised to include RLs for subsurface soils and groundwater (Also See Comment No. 1 above).

Section 8.0 - Ecological Risk Assessment

13. Table 8.5: No Observed Adverse Effect Level (NOAEL) values provided for lead are estimated from tests employing lead acetate rather than from tests employing metallic lead (or other forms). A note should be included in Table 8.5 specifying that the values provided are derived from lead acetate tests.

14. Table 8.6: Please reference the mammal and bird NOAEL values provided in Table 8.6 (i.e., include a note that the values represent NOAELs for test species from which estimated NOAELs were derived).

15. Table 8.6: According to footnote, mammalian NOAEL for benzo(a)pyrene comes from Sample et al. (1996); however, Sample et al. does not appear to contain this data. Please recheck the reference.

16. Table 8.8: The Toxicity Reference Value (TRV) for xylenes (total) should be 84, not 8.4. In addition, Fort Stewart proposes using 1/10 for the xylenes TRV as an estimated TRV value for ethylbenzene. Therefore, please insert this number, "8.4[a]," into the revised Table 8.8.

Appendices

17. Appendix F (Background Data Summary) should be revised to include (1) definitions of the acronyms and abbreviations used within it (e.g., *CV* and the single letter codes in the column labelled *Dist.*) and (2) an explanation of the term, *Site-specific Criteria*. In addition and because the analytical results are reported only if they exceed the detection limits, individual hazardous constituent detection limits should also be included in the table.

18. Appendix G (Analytical Laboratory Data) should be revised to include definitions of the acronyms and abbreviations utilized (e.g., sample types, qualifiers and validations codes).

The revision for the SWMU 26 RFI Report, appropriately addressing the comments above, must be submitted within sixty (60) days of receipt of this correspondence in the form of revised/new pages or a totally revised work plan. Note that four (4) copies of the revised SWMU 26 RFI Report are

required to be submitted to GA EPD. Should Fort Stewart decide to submit revised or new pages, please number with appropriate page numbers and the date revised, e.g., Page 6 (Revised 10/16/98). Should you have any questions concerning this correspondence, please contact Brent Rabon or Madeleine Kellam of my staff at (404)656-2833.

Sincerely,

Bruce Khaleghi, Unit Coordinator
Hazardous Waste Management Branch

c: Mr. Larry Rogers, GA EPD-Southeast Regional Office
File: Fort Stewart(R)
R:\BRENTR\STEWART\SWMU26\RFIREPT.COM

DEPARTMENT OF THE ARMY
HEADQUARTERS, FORT STEWART
Directorate of Public Works
1557 Frank Cochran Drive
Fort Stewart, Georgia 31314-4928

REPLY TO
ATTENTION OF

March 23, 1998

Directorate of Public Works

CERTIFIED MAIL
Z-426-191-430

Georgia Environmental Protection Division
Attention: Mr. Bruce Khaleghi
205 Butler Street, Southeast
Suite 1154
Atlanta, Georgia 30334

Dear Mr. Khaleghi:

Fort Stewart is pleased to submit four copies of the Phase II Resource Conservation and Recovery Act Facility Investigation (RFI) Report for the Former 724th Tanker Purging Station, Solid Waste Management Unit 26, located at Fort Stewart, Georgia.

In accordance with the Federal Code of Regulations, Section 270.11(d), the following certification is provided by the Installation:

> I certify under penalty of law that this document and all attachments were prepared under my direction or supervision in accordance with a system designed to assure that qualified personnel properly gather and evaluate the information submitted. Based on my inquiry of the person or persons who manage the system, or those persons directly responsible for gathering the information, the information is, to the best of my knowledge and belief, true, accurate, and complete. I am aware that there are significant penalties for submitting false information, including the possibility of fine and imprisonment for knowing violations.

Please contact Ms. Melanie Little or Ms. Tressa Rutland, Directorate of Public Works Environmental Branch, at (580) 353-8165 or (912) 767-7919, respectively, should questions arise regarding this project and/or the enclosed documents.

Sincerely,

Dale A. Kiefer
for Carey W. Brown
Lieutenant Colonel, U.S., Army
Director, Public Works

Enclosures

FINAL

PHASE II RCRA FACILITY INVESTIGATION REPORT
for the
FORMER 724TH TANKER PURGING STATION (SWMU 26)
at
FORT STEWART, GEORGIA

PREPARED FOR

US Army Corps of Engineers®

SAVANNAH DISTRICT

CONTRACT No. DACA21-95-D-0022
Delivery Order 0023

March 1998

SAIC®

96-05MS(TPS/FIR)/131398

9.0 CONCLUSIONS AND RECOMMENDATIONS

9.1 SUMMARY OF FINDINGS

The RFI presented in this report was conducted to collect additional analytical data for determining the nature and extent of contamination in environmental media in the vicinity of the Former 724th TPS. The data were derived from a series of screening and primary samples collected from surface and subsurface soils, sediments, surface water, and groundwater in the study area. The samples collected were analyzed for a number of COPCs, including metals, VOCs and SVOCs.

Results of these analyses indicated that soils at the site contain elevated levels of VOCs, predominantly BTEX, PAHs, and metals, including barium, cadmium, chromium, and mercury. Sediments revealed elevated concentrations of VOCs like methylene chloride, toluene, and xylene, and metals including barium, chromium, lead, mercury, and silver. Surface waters indicated the presence of metals including arsenic, cadmium, lead, and silver, but no organics. Groundwater samples showed evidence of fuel-related contaminants and organic solvents such as naphthalene, BTEX, 1,1 dichloroethane, 1,2 dichloroethane, chloroform, chloromethane, methylene chloride, 2-butanone, 2-hexone, and acetone. Metals detected in groundwater included arsenic, barium, mercury, selenium, and silver.

The following summarizes the significant findings of Phase II RFI sampling and analysis:

- Contamination is present in both soil and groundwater at the site, dominated by BTEX compounds, with secondary contaminants such as 1,1-dichloroethane.

- BTEX contamination in soil extends to the water table (approximately 6 feet deep) and is greatest immediately north and east of the area of excavated soils removed in August 1996. The soil contamination covers an area approximately 60 by 75 feet.

- BTEX contamination in groundwater extends to a depth of approximately 20 feet below the water table, although isolated areas of BTEX were found in groundwater to depths up to 40 feet. The BTEX contamination covers a plume area approximately 100 feet wide by 160 feet long, extending from the Former 724th TPS facilities to the north and west.

- The BTEX plume is more than 1,000 feet from Mill Creek and is, therefore, not impacting Mill Creek. Contamination in Mill Creek is not related to the Former 724th TPS.

- Biodegradation of the VOCs is likely occurring, as evidenced by the presence of methane, a breakdown product of BTEX degradation.

- Some metals (principally barium, chromium, and lead) are present in soil, sediment, and surface water and are present in the swale immediately west of the site.

9.2 CONCLUSIONS

Several assessments were conducted to determine the significance of the contaminant concentrations found at the Former 724th TPS with respect to their impact on human health and the environment. The assessments included:

- A contaminant fate and transport analysis (Section 6.0) which provided an assessment of the potential migration pathways and transport mechanisms affecting the chemical compounds found at the site.

- A human health risk assessment (Section 7.0) which employed a Step 1 risk evaluation to determine potential human health risks associated with the COCs.

- An ecological risk assessment (Section 8.0) which provided a Phase 1 preliminary risk evaluation for terrestrial and aquatic habitats in the study area.

The following summarizes the conclusions regarding contaminant fate and transport:

- Metals are not considered contaminant migration COPCs, mainly due to their low concentrations in the soils.

- Organics in the site soils that exceed EPA GSSLs and are, therefore, of concern for leaching from soils to groundwater, include BTEX, acetone, and naphthalene. These organics, except naphthalene, due to their high mobility, have already reached the groundwater. However, groundwater movement off site is very slow (3.6 ft/yr) and may take 280 years to reach the receptor location (i.e., Mill Creek).

- The organic compounds that are currently observed above their respective MCLs in groundwater are BTEX and acetone. Based on the site conceptual model, although these contaminants may have been leaching (and may continue to leach in the future) from the contaminated soils into the groundwater beneath the site with concentrations above their MCLs, off-site migration of this contaminant will be limited due to retardation and biodegradation as well as the slow movement of groundwater flow. Benzene will degrade to a concentration less than its MCL in 22 years, having traveled less than 80 feet from the source. Similarly, ethylbenzene, toluene, xylene, and acetone with higher biodegradation rates will remain at concentrations much lower than benzene. Therefore, none of the constituents from the Former 724th TPS site are expected to be of potential concern at the nearest receptor location [i.e., Mill Creek (1000 feet from the source)].

The following summarizes the conclusion of the human health risk assessment:

- Based on the results of the screening and the weight-of-evidence analysis, potential COPCs have been identified for subsurface soils and groundwater. There are no COPCs for surface soils, surface water, or sediment.

- The initial COPCs for subsurface soils are acetone, benzene, toluene, ethylbenzene, and xylenes. The COPCs for subsurface soil do not present a significant potential risk to receptors as a result of direct exposure, but the identified contaminants may leach into groundwater at concentrations that are unacceptable in terms of using groundwater as a drinking water source.

- Methylene chloride was identified as a possible COPC for sediment as a result of leaching into groundwater at concentrations that are unacceptable based on the use of groundwater as a drinking water source. Direct exposure to this contaminant is not expected to present an unacceptable risk to human health. Methylene chloride is a common laboratory artifact and is not considered related to contaminant releases from the Former 724th TPS. There are, therefore, no human health COPCs for sediment.

- The initial COPCs for groundwater were identified because they present a potential threat to human health as a result of using groundwater as a source of drinking water. The initial COPCs for groundwater are acetone, 1,2-dichloroethane, chloroform, chloromethane, and BTEX.

- It should be noted that given the shallow depth of the surficial aquifer and the presence of the deeper Principal Artesian aquifer, a common source of drinking water throughout the region, the use of the surficial aquifer is not considered to be a viable exposure scenario. Drinking water screening values were used in the absence of more appropriate values.

The following summarizes the conclusions of the ecological risk assessment:

- No chemical was detected in surface soil at the former 724th TPS at concentrations that exceed both reference background criteria and the TRVs for ecological receptors. There is uncertainty about whether ethylbenzene, benzo(b)flouranthene, and styrene are ecological COPCs in surface soil, because no TRVs can be derived for these substances. Benzo(b)flouranthene and styrene were not present at the site, but were detected only at MW-5 (adjacent to Mill Creek) at concentrations near their detection limit, and are therefore not site-related. Ethylbenzene was detected in surface soil at MW-2 and is related to former releases at the site. However, ethylbenzene in surface soil is unlikely to pose a risk to ecological receptors given the low concentration (0.02 mg/kg) relative to the proposed TRV for ethylbenzene of 8.4 mg/kg, which is one tenth the TRV for total xylenes. There are therefore no ecological COPCs in surface soil.

- Barium and silver were identified as ecological COPCs in sediment in the drainage swale, but exposure of sediment-dwelling biota to sediment in the swale was judged to be unlikely. The swale is an ephemeral surface water body, as shown by the lack of water at SWS-3 at the time of sampling, and is unlikely to support a community of aquatic sediment-dwelling organisms. Exposure of other types of receptors, (e.g. terrestrial animals) to swale sediment by direct contact and ingestion is likely to be minimal. There are therefore no ecological COPCs in sediment in the swale.

- Cadmium, lead, and silver were detected in surface water in the drainage swale at the Former 724th TPS at concentrations that exceed reference background criteria and also exceed EPA Region 4 ESVs for aquatic biota. However, there are no aquatic biota or other ecological receptors of concern in the man-made swale. Maximum surface water concentrations of cadmium and lead do not exceed a published TRV for terrestrial receptors (raccoons) and are therefore not of concern. There is uncertainty about whether silver is of concern because there is no published TRV for silver. There are therefore no ecological COPCs in surface water in the swale.

- Barium, mercury, silver, benzene, and chloromethane are present in groundwater at the Former 724th TPS at concentrations that exceed reference background criteria and also exceed EPA Region 4 ESVs for surface water. However, there are no aquatic biota or other ecological receptors of concern in the man-made swale. Maximum groundwater concentrations of barium, mercury, and benzene do not exceed a published TRV for terrestrial receptors (raccoons) potentially ingesting groundwater as surface water; therefore these metals are not of concern for raccoons. There is uncertainty about whether silver or chloromethane are ecological COPCs in groundwater because there are no published TRVs

for them. However, silver and chloromethane are higher in the upgradient well and are not considered site-related. There are therefore no ecological COPCs in groundwater at the site.

- In Mill Creek, mercury was identified as an ecological COPC in surface water based on comparison to EPA Region 4 ESVs. Mercury is also an ecological COPC in surface water for protection of terrestrial predators (mink, green heron) in Mill Creek based on comparison to their TRVs. In Mill Creek sediment, no ecological COPCs were identified, although there is uncertainty about barium, since there are no published values for barium. Migration of contaminants to Mill Creek from the 724th TPS is unlikely either via groundwater discharge or via surface water runoff. There is no complete pathway from the Former 724th TPS to ecological receptors in Mill Creek. Therefore, ecological risks in Mill Creek are not related to the Former 724th TPS.

9.3 RECOMMENDATIONS

The results of the RFI and conclusions reached through analysis of data and conduct of the assessments referenced above indicate that future additional actions are warranted at the Former 724th TPS site. Recommendations for further action are as follows:

- Because there are no ecological COPCs at the Former 724th TPS, an Ecological Risk Assessment is not warranted.

- Because BTEX levels in the groundwater exceed established MCLs, a Corrective Action Plan will be required to address measures to mitigate the effects of these contaminants and their source. The plan should evaluate the effectiveness of natural attenuation in remediating VOCs in soil and groundwater by using fate and transport modeling of leaching and biodegradation. The Corrective Action Plan would present human health cleanup goals using viable future use scenarios.

- An additional round of groundwater monitoring should be conducted in the four on-site wells. Samples should be analyzed for VOCs and RCRA metals and for natural attenuation parameters such as methane, ethane, ethene, alkalinity, and pH. The sampling should be conducted within 90 days after acceptance of this report by GEPD. Results of the sampling would be used to verify concentrations of metals in groundwater and to provide further evidence that natural attenuation of VOCs is occurring. The results would be submitted to GEPD as part of the Corrective Action Plan.

10. REFERENCES

American Society for Testing and Materials. 1995. Standard Guide for Risk-Based Corrective Action Applied at Petroleum Release Sites, ASTM Designation E:1739-95, Annual Book of ASTM Standards, West Conshohocken, PA

Arora, R. 1984. Hydrologic Evaluation for Underground Injection Control in the Coastal Plain of Georgia, Department of Natural Resources, Environmental Protection Division, Georgia Geological Survey.

Clayton, G.D., and F.E. Clayton (eds). 1981. Patty's Industrial Hygiene and Toxicology, Vol. 2A: Toxicology, 3rd Revised Edition. John Wiley & Sons, New York.

Eisler (U.S. Fish and Wildlife Service). 1987. Mercury Hazards to Fish, Wildlife, and Invertebrates: A Synoptic Review. Biological Report 85(1.10), Fish and Wildlife Service, U.S. Department of the Interior, Patuxent, MD.

Eisler. 1988. Lead Hazards to Fish, Wildlife, and Invertebrates: A Synoptic Review. Biological Report 85(1.14), Fish and wildlife Service, U.S. Department of the Interior, Patuxent, MD.

Environmental Science and Engineering. 1982. Fort Stewart Military Reservation RCRA Studies: Final Engineering Report.

EPA (U.S. Environmental Protection Agency). 1987. Hazardous Waste Treatment, Storage, and Disposal Facilities (TSDF) - Air Emission Models, Office of Air and Radiation, Research Triangle Park, NC.

EPA. 1991. Risk Assessment Guidance for Superfund, Volume I: Human Health Evaluation Manual, Part B, Development of Risk-Based Preliminary Remediation Goals, Interim, Publication 9285.7-01B, EPA, Office of Emergency and Remedial Response, Washington, DC.

EPA. 1991. Soil Transport and Fate (STF) Database and Model Management System, Ver. 2.0, R.S. Kerr Environmental Research Laboratory, Ada, OK.

EPA. 1993. Risk Reduction Engineering Laboratory (RREL) Treatability Database, Ver. 4.0, Office of Research and Development, Cincinnati, OH.

EPA. 1993a. Guidelines for Deriving Site-specific Sediment Quality Criteria for the Protection of Benthic Organisms, EPA-822-R-93-017.

EPA. 1993b. Wildlife Exposure Factors Handbook, Vol. 1 EPA/600/R-93/187a.

EPA. 1994. Technical Background Document for Soils Screening Guidance, EPA/540/R-94/106, NTIS PB95-963532.

EPA 1994. The Hydrologic Evaluation of Landfill Performance (HELP) Model, Version 3, EPA/600/R-94/168b, Office of Research and Development, Washington, D.C.

EPA. 1996a. Supplemental Guidance to RAGS, Region IV Bulletins, Ecological Risk Assessment, Nos. 1-5, USEPA Region 4, Office of Health Assessment, October 1996 (Draft).

EPA 1996. Soil Screening Guidance: Technical Background Document, EPA/540/R-95/128, Office of Solid Waste and Emergency Response, May.

EPA. 1996b. Proposed Guidelines for Ecological Risk Assessment, EPA/630/R-95/002B, Washington, DC.

EPA. 1997. Ecological Risk Assessment Guidance for Superfund, Process for Designing and Conducting Ecological Risk Assessments, Environmental Response Team, Edison NJ, Interim Final, June 1997.

Georgia Environmental Protection Division (GEPD). 1996. Guidance for Selecting Media Remediation Levels at RCRA Solid Waste Management Units, Georgia Environmental Protection Division, Atlanta, GA, November.

GEPD. 1997. Personal communication from Rod Stafford, GEPD, Department of Natural Resources, Atlanta, GA, October 6.

Geraghty and Miller. 1992. RCRA Facility Investigation Final Work Plan, Fort Stewart, Georgia, June.

Krause and Randolph. 1989.

HAZWRAP. 1994. Loring Air Force Base Ecological Risk Methodology, Martin Marietta Energy Systems, Inc. Draft.

Howard, P.H., R.S. Boethling, W.F. Jarvis, W.M. Meylan, and E.M. Michalenko. 1991. Environmental Degradation Rates, Lewis Publishers, Inc., Chelsea, MI.

Looper, E.E. 1982. Soil Survey of Liberty and Long Counties, Georgia, U.S. Department of Agriculture, Soil Conservation.

Metcalf and Eddy. 1996. Final Work Plan for RCRA Facility Investigation at Bulk Fuel Storage System, Wright Army Airfield, Fort Stewart, Georgia.

Miller, J.A. 1990. Groundwater Atlas of the United States, Segment 6, U.S. Department of the Interior, U.S. Geological Survey, Hydrologic Inventory Atlas 730G.

Mills, W.B., D.B. Porcella, M.J. Ungs, S.A. Gherini, K.V. Summers, G.L. Rupp, and G.L. Bowie. 1985. Water Quality Assessment: A Screening Procedure for Toxic and Conventional Pollutants: Parts 1,2, and 3, EPA/600/6-85/002, EPA Environmental Research Laboratory, Office of Research and Development, Athens, GA.

Perry, R.H., Chilton, C.H., Kirkpatrick, S.D. 1969. Chemical Engineers Handbook, Mc-Graw Hill Book Company, New York, NY.

Rust (Rust Environmental and Infrastructure, Inc.). 1996. Phase I RCRA Facility Investigation Report for 24 Solid Waste Management Units at Fort Stewart, Georgia, Vols. I-III, May.

Sample, B.E., Opresko, D.M., and G.W. Suter II. 1996. Toxicological Benchmarks for Wildlife: 1996 Revision, ES/ER/TM-86/R3.

SAIC (Science Applications International Corporation). 1997. Sampling and Analysis Plan for the Phase II RCRA Facility Investigation at the Former 724th Tanker Purging Station, SWMU 26, Fort Stewart, Georgia, May.

Shen, T.T., Schmidt, C.E., and Card, T.R. 1993. Assessment and Control of VOC Emissions from Waste Treatment and Disposal Facilities, Van Nostrand Reinhold, New York, NY.

Shuman, L.M. 1991. "Chemical forms of micronutrients in soils," in J.J. Montvedt (ed.), Micronutrients in Agriculture, Soil Sci. Soc. Am. Book Series No. 4, Soil Sci. Soc. Amer., Inc., Madison, WI.

Suter, G.W. II, and C.L. Tsao. 1996. Toxicological Benchmarks for Screening Potential Contaminants of Concern for Effects on Aquatic Biota: 1996 Revision. ES/ER/TM-96/R2. Lockheed Martin Energy Systems, Oak Ridge National Laboratory, Oak Ridge, Tennessee.

Tracer Research Corporation. 1994. Fort Stewart, Savannah, Georgia, 1993 Annual Sampling Event of 135 Underground Storage Tanks. January.

U.S. Department of Commerce. 1990. 1990 Census, Bureau of the Census.

USGS (U.S. Department of Interior, Geological Survey). 1981. Chemical Analyses of Soils and Other Surficial Materials of the Conterminous United States. Open-File Report 81-197.

STATE OF GEORGIA
DEPARTMENT OF NATURAL RESOURCES
ENVIRONMENTAL PROTECTION DIVISION
GEORGIA GEOLOGIC SURVEY

INJECTION WELL OPERATING PERMIT APPLICATION

Regulatory Agency:
Georgia Geologic Survey Branch
Environmental Protection Division
Georgia Department of Natural Resources
Room 400
19 Martin Luther King, Jr. Dr. S.W.
Atlanta, Georgia 30334

Legal Authority:
Georgia Rules for Underground
Injection Control, Chapter 391-3-6-.13 of the
Georgia Water Quality Control Act
O.C.G.A. 12-5-20 et. seq.

FACILITY DATA

Former 724th Tanker Purging Station (SWMU 26)
Business/Corporate Name

1800 Block of McFarland Ave.	Fort Stewart	Liberty
Street	City	County

Georgia	31314-4928	
State	Zip Code	Telephone Number

Former tanker truck cleaning facility
Type of Industry

Thomas C. Fry
Name of Owner or Authorized Representative

Chief
Environmental Natural Resources Division
Title of Authorized Representative

(912) 767-2010
Number if Different from Above

Is the underground injection part of a corrective action or remediation plan to be included in another EPD permit? If so, please explain.
Yes. The purpose is to enhance bioremediation of petroleum hydrocarbons. The CAP was submitted in previous permit application. This submittal is to inject nitrous oxide along with the triethyl phospate that is being injected.

STATE OF GEORGIA
DEPARTMENT OF NATURAL RESOURCES
ENVIRONMENTAL PROTECTION DIVISION
GEORGIA GEOLOGIC SURVEY

INJECTION WELL OPERATING PERMIT APPLICATION

Regulatory Agency:
Georgia Geologic Survey Branch
Environmental Protection Division
Georgia Department of Natural Resources
Room 400
19 Martin Luther King, Jr. Dr. S.W.
Atlanta, Georgia 30334

Legal Authority:
Georgia Rules for Underground Injection Control, Chapter 391-3-6-.13 of the Georgia Water Quality Control Act O.C.G.A. 12-5-20 et. seq.

FACILITY DATA

Former 724th Tanker Purging Station (SWMU 26)
Business/Corporate Name

1800 Block of McFarland Ave.	Fort Stewart	Liberty
Street	City	County

Georgia	31314-4928	
State	Zip Code	Telephone Number

Former tanker truck cleaning facility
Type of Industry

Thomas C. Fry
Name of Owner or Authorized Representative

Acting Chief
Environmental Natural Resources Division
Title of Authorized Representative

(912) 767-2010
Number if Different from Above

Is the underground injection part of a corrective action or remediation plan to be included in another EPD permit? If so, please explain.
Yes. The purpose is to enhance bioremediation of petroleum hydrocarbons. The CAP was submitted in previous permit application. This submittal is to inject nitrous oxide along with the triethyl phospate that is being injected.

INJECTION WELL DATA
DRILLER:

Miller Drilling	GA Contractor #386
Contractor Name	Bond Number

107 Helton Drive	Lawrenceburg	Lawrence
Street	City	County

Tennessee	38464	(931) 762-7548
State	Zip Code	Telephone Number

How many injection wells or devices does this application include? Please supply number here: 20

Are the wells or devices proposed or existing? Existing

Classification of injection well(s) or devices (please circle):
I, II, III, IV (prohibited), V

INJECTION WELL CONSTRUCTION

Well Depth ~20 ft Borehole Dia. 9 5/8" Csg. Depth ~19 ft

Csg. Dia. 2 in. Screen Type HDPE slotted Screen Dia. 2.0 in. ID

Screened Interval: from ~19ft to ~20 ft

Grout Type Bentonite

Grouted Interval: from 0 to 18ft Grout Thick. 18ft

Csg. Material (please check material used):

___PVC ___Black Steel ___Galvanized Steel ___Polybutylene
___Polyethylene ___Black Latex ___Fiberglass ___Stainless Steel
_X_Other (HDPE)

Please provide a detailed diagram of the injection well(s) or device(s) showing the items described above. No new injection wells have been added to the permit. Locations of injectors are shown in attached Figure along with monitoring wells and piezometers.

INJECTION SYSTEM DATA

Type of Injection Fluid: Nitrous Oxide (NO_2) and TEP

INJECTION SYSTEM DATA (CONT.)

Source of Injected Fluid: compressed air & nitrous oxide (150 lb cylinders)

Purpose of Injection: Enhance bioremediation

Proposed Injection Rate: 2 cfm air & 0.002 cfm NO_2 average daily gallons per minute (or SCFM for air) per well

Proposed Injection Volume: 576 CF air and 0.576 CF NO_2 average daily gallons (or SCF for air) per well

Proposed Injection Pressure: 20 psi average daily lbs./sq. inch (psi)

Please include the following with the application:

a. A chemical analysis of the injected fluid, if liquid. The analysis must include all constituents specific in the currently applicable Georgia Rules for Safe Drinking Water. 0.01% (V/V) triethylphosphate (as P), balanced air

b. A detailed diagram showing the engineering layout of the injection equipment and all piping associated with the system. No change

c. A comprehensive subsurface report, prepared by or directly supervised by a Georgia Professional Geologist, including all the geological and hydrogeological parameters of the site. No change

d. A notarized statement from the applicable local government stating that the injection project is consistent with the local land use plan or zoning requirements. NA-Military reservation

e. A detailed map orienting the injection well(s) and any other wells to two (2) nearby reference points such as roads, streams, or nearby structures, etc. Please clearly mark the distances from the wells to the reference points. Map showing locations of wells attached

f. The approved Corrective Action Plan for the UIC permit file. No change

The applicant specifically grants to EPD or any authorized agent of the Director the right of entry and travel upon the injection well site for the purpose of conducting necessary compliance inspections.

Certification:
I certify under the penalty of law that I have examined and am familiar with the information contained in this document and all attachments and that, based on the inquiry of the individuals responsible for the data, I believe that the information is true, accurate, and complete. I am aware that there are penalties for submitting false information, including the possibility of fine and imprisonment.

Owner or Authorized Representative

Signature Date Signed

1-25-68
1:20000
ROLL 1
11
10
Chuang River
150 YEO