Sampling and Analysis Plan (SAP) and Quality Assurance Project Plan (QAPP)

Hunter Army Airfield, Georgia

September 2014

PIKA
ARCADIS

Rachelle Borne
Project Chemist

Shelley Gibbons
Project Manager

Sampling and Analysis Plan (SAP) and Quality Assurance_

Hunter Army Airfield, Georgia

Prepared for:
US Army Environmental Command

Prepared by:
ARCADIS
801 Corporate Center Drive
Suite 300
Raleigh
North Carolina 27607
Tel 919.854.1282
Fax 919.854.5448

Our Ref.:
10153001.0001

This document is intended only for the use of the individual or entity for which it was prepared and may contain information that is privileged, confidential and exempt from disclosure under applicable law. Any dissemination, distribution or copying of this document is strictly prohibited.

Table of Contents

1. Introduction **1-1**

2. Site Preparation and Mobilization Procedures **2-1**

2.1 Initial Coordination 2-1

2.2 Mobilization and Subcontractor Coordination 2-1

2.3 Utility Clearance 2-1

2.4 Site Reconnaissance 2-2

2.5 Field Operations Contingency Plans 2-2

2.6 On-Site PIKA-ARCADIS JV Representative 2-3

2.7 Contractor Compliance and Permitting 2-3

2.8 Adherence to Technical Specifications 2-4

3. Field Investigation Procedures **3-1**

3.1 Lithologic Logging 3-1

3.2 Direct Push Borings and Sample Collection 3-2

3.2.1 Soil Sample Collection 3-2

3.2.2 Groundwater Sample Collection 3-3

3.2.3 Membrane Interface Probe Borings 3-4

3.2.4 Temporary Piezometer Installation 3-4

3.2.5 Temporary Piezometer Fluid Gauging 3-5

3.2.6 Direct Push Boring Abandonment 3-6

3.2.7 Temporary Piezometer Abandonment 3-6

3.3 Drilling Techniques 3-6

3.3.1 Hollow-Stem Auger Techniques in Soil 3-6

3.3.2 Mud Rotary Drilling 3-7

3.3.3 Rotasonic Drilling Methodology 3-8

3.4 Collection of Samples for Geotechnical and Chemical Analyses 3-9

3.4.1 Geotechnical Samples in Soil and Unconsolidated Deposits 3-9

3.4.2 Geotechnical Samples in Sediment 3-10

3.4.3	Samples for Chemical Analyses	3-11
3.5	Monitoring Well Construction	3-12
3.5.1	Shallow and Intermediate Well Construction	3-12
3.5.2	Pre-pack Screen Monitoring Well Construction	3-14
3.5.3	Monitoring Well Construction Beneath a Confining or Semi-Confining Layer	3-14
3.5.4	Borehole and Well Abandonment	3-16
3.5.5	Temporary Well Abandonment	3-16
3.5.6	Soil Boring Abandonment	3-16
3.6	Groundwater Level Measurements and Sampling	3-17
3.6.1	Groundwater Level Measurements	3-17
3.6.2	Low-Flow Groundwater Purging and Sample Collection	3-18
3.6.3	Slug Test	3-21
3.6.4	Constant Rate Pump Test	3-22
3.6.5	LNAPL Bail Down Test	3-23
3.7	Test Pit Excavations	3-24
3.8	Sediment Sampling	3-24
3.8.1	Shallow Ditch Sediment Sampling	3-24
3.8.2	Deep Ditch Sediment Sampling	3-25
3.8.3	Shallow Stream Sediment Sampling	3-27
3.9	Surface Water Sampling	3-28
3.10	Field Analytical Measurements	3-30
3.11	Quality Control Samples	3-30
3.12	Field Equipment Decontamination	3-32
3.12.1	Cleaning Materials	3-32
3.12.2	Marking and Segregation of Used Field Equipment	3-33
3.12.3	Safety Procedures to be Utilized During Cleaning Operations	3-33
3.12.4	Storage of Field Equipment and Sample Containers	3-33

3.12.5 Cleaning Procedures 3-34

3.12.5.1 Drilling and Direct Push Equipment 3-34

3.12.5.2 Teflon™, Stainless Steel, or Glass Field Sampling Equipment 3-34

3.12.5.3 Other Sampling Equipment 3-35

3.12.5.4 Trace Organic Sampling Equipment 3-35

3.12.5.5 Field Analytical Equipment and Other Field Instruments 3-36

3.12.5.6 Ice Chests and Shipping Containers 3-36

3.12.6 Disposable Materials 3-36

3.13 Characterization and Disposal of Investigative Derived Wastes 3-37

3.13.1 Soils/Sediment/Waste 3-37

3.13.2 Water 3-37

3.14 Site Survey 3-37

4. Field Documentation Procedures 4-1

4.1 Sample Designation 4-1

4.2 Field Activity Documentation 4-3

4.2.1 Utilities and Structures Checklist 4-4

4.2.2 Location Sketch 4-4

4.2.3 Boring/ Well Construction Logs 4-4

4.2.4 Water Level Measurement Form 4-4

4.2.5 Sample Key 4-4

4.2.6 Sampling Location Survey Summary 4-5

4.2.7 Water Sample Log 4-5

4.2.8 Groundwater Sampling Form 4-5

4.2.9 Well Sampling Summary 4-5

4.2.10 Water Level/Pumping Test Record 4-5

4.2.11 Soil/Sediment Sample Log 4-5

4.2.12 Soil Sampling Summary 4-6

4.2.13 Surface Water Sample Log 4-6

4.2.14 Field Instrument Calibration Form 4-6

4.2.15 Daily Log 4-6

4.2.16 Sample Label 4-7

4.2.17 Chain-of-Custody Form 4-7

4.2.18 Chain-of-Custody Seal 4-8

4.2.19 Bill of Lading 4-8

4.3 Chain-of-Custody Procedures 4-8

4.3.1 Transfer of Custody 4-9

4.3.2 Sample Preparation and Shipment 4-9

4.3.3 Laboratory Sample Receiving 4-9

5. References 5-1

Figure

3-1 Well Schematic for Prepacked Screens

Appendices

A Site-Wide QAPP

B Field Standard Operating Procedures (SOPs)

C Field Forms

- Utilities and Structures Checklist
- Location Sketch
- Boring/Well Construction Log
- Well Construction Log (Unconsolidated)
- Well Construction Log - Telescoping
- Well Development Form
- Geoprobe® Groundwater Sample Form
- Well Sampling Summary
- Water Level Measurement Form
- Water Level/Pumping Test Record

- Sample Key
- Sampling Location Survey Summary
- Soil/Sediment Sample Log
- Soil Sampling Summary
- Groundwater Sample Form
- Surface Water Sample Log
- PID Calibration Form
- Field Instrument Calibration Log
- Daily Log
- Chain-of-Custody Record

Acronyms and Abbreviations

amsl	above mean sea level
ARCADIS	ARCADIS U.S., Inc.
ASTM	American Society for Testing and Materials
bgs	below ground surface
CERCLA	Comprehensive Environmental Response, Compensation, and Liability Act
COC	chain of custody
DPW	Department of Public Works
FID	flame ionization detector
ft	feet
GAEPD	Georgia Environmental Protection Division
gpm	gallons per minute
GPS	global positioning system
HASP	Health and Safety Plan
IDW	investigative derived waste
JV	Joint Venture
MIP	membrane interface probe
mL/min	milliliters per minute
MS/MSDs	matrix spike/matrix spike duplicates
NAPL	non-aqueous phase liquid
NTUs	nephelometric turbidity units
O.D.	outside diameter
ORP	oxidation reduction potential
OCGA	Official Code of Georgia Annotated
PBC	Performance Based Contract

Acronyms and Abbreviations

PCB	polychlorinated biphenyl
PID	photoionization detector
PIKA	PIKA International, Inc.
PVC	polyvinyl chloride
QAPP	Quality Assurance Project Plan
QA/QC	quality assurance/quality control
SAP	Sampling and Analysis Plan
TCLP	Toxicity Characteristic Leaching Procedure
UPC	Utility Protection Center
USEPA	United States Environmental Protection Agency
USCS	Unified Soil Classification System
VOC	volatile organic compound

1. Introduction

This Sampling and Analysis Plan (SAP) and Quality Assurance Project Plan (QAPP) was prepared by the PIKA International, Inc. (PIKA) and ARCADIS U.S., Inc. (ARCADIS) Joint Venture (JV) to provide field personnel with detailed instructions and procedures regarding field activities to be performed in support of Comprehensive Environmental Response, Compensation, and Liability Act (CERCLA) remedial activities and to document the performance of all environmental field activities at Hunter Army Airfield in Georgia.

This site-wide SAP provides a detailed description of the field investigation methodologies that will be used to complete the CERCLA remedial process at the Sites included in the PIKA-ARCADIS JV Performance Based Contract (PBC) contract. The QAPP, included as Appendix A, presents the policies, organization, objectives, functional activities, and specific quality assurance/ quality control (QA/QC) procedures. The QA/QC procedures will be employed by the PIKA-ARCADIS JV to ensure that all technical data generated are accurate and representative, and the data will be of known and usable quality for the intended purpose. Site-specific work plans that further define the scope of activities to be performed at each individual Site will reference this plan for the general procedures to be used in completing the prescribed field activities.

The PIKA-ARCADIS JV field personnel will use the procedures described in this SAP to produce accurate, comparable, and reproducible data for reduction and evaluation. This SAP is divided into four sections. A brief description of each section is provided below:

- **Section 1, Introduction** – Summarizes the purpose and organization of the plan.

- **Section 2, Site Preparation and Mobilization Procedures** – Describes the tasks to be performed prior to mobilization to the field, including notification and coordination requirements.

- **Section 3, Field Investigation Procedures** – Presents a detailed discussion of the procedures to be used in completing the field tasks, including information on drilling, well construction, sampling, decontamination, investigation derived waste, and the site survey. Field Standard Operating Procedures (SOPs) are included as Appendix B.

- **Section 4, Field Documentation Procedures** – Outlines the methods to be used for sample designation, chain-of-custody (COC) procedures, and field documentation.

Throughout this SAP, reference is made to standard forms and logs used by the PIKA-ARCADIS JV field personnel to record field observations and measurements. Examples of each of these forms are provided in Appendix C of this SAP.

2. Site Preparation and Mobilization Procedures

Initial project coordination, subcontractor coordination, and utility clearance activities will be conducted prior to initiating the field sampling activities. These pre-mobilization activities are discussed in the following subsections.

2.1 Initial Coordination

The Hunter Army Airfield environmental staff will be notified at least 2 weeks before the start of any field work.

2.2 Mobilization and Subcontractor Coordination

The subcontractors, including drillers, laboratories, and surveyors, will be selected and contracts will be executed in advance of beginning the field activities.

2.3 Utility Clearance

Prior to mobilization, all underground utility lines, and other underground structures will be clearly marked. PIKA-ARCADIS JV personnel will be responsible for making certain the underground utilities and structures are located and marked. PIKA-ARCADIS JV is responsible for submitting a utility locate request through Georgia 811. Georgia 811 will accept these locate request either by phone or internet. The phone number is (800) 282-7411. The Georgia 811 web address is www.Georiga811.com to make the request. In order to submit a request using the website, pre-registration will be required. The contractor must mark the boundaries of the proposed work site using either white paint, flags or stakes. A 50 foot radius will be marked out around each boring location. Department of Public Works (DPW) will accept responsibility for accuracy of the locates pertaining to gas and fuel lines, water lines, electrical lines to include secondary electricity, airfield lighting, low voltage, fire systems, sewer lines, roof drain lines, storm drain lines, industrial waste lines, chilled water lines, high temperature water lines, irrigation systems, and DPW non-fiber computer lines. These requests will be forwarded to all utility companies with services present within the proposed work site.

Permits will be issued within 48 hours of the next business day following the receipt of the request by Georgia 811. The permits will only be valid for 21 days and renewal requests should be submitted a minimum of 3 days prior to expiration. Requesting contractors are responsible for maintaining marks during the 21-day period. If, after

acquiring a permit, a utility is damaged during field activities, the appropriate utility company must be notified. DPW's utilities are listed above and the points of contact are:

Hunter Army Airfield	Tony West	(912) 315-5523

The contractor should be prepared to submit proof of a valid permit at that time.

PIKA-ARCADIS JV personnel will be responsible for notifying the Hunter Army Airfield environmental office of planned intrusive activities at least 2 weeks prior to the initiation of field activities. Upon arrival at the installation, the field operations leader will check the proposed drilling, sampling, and trenching locations for marked underground utilities, other underground structures, and above-ground pipe racks or power lines. A Utilities and Structures Checklist (Appendix C) will be completed by the Field Operations Leader for each area to be sampled prior to commencement of field activities. A copy of the completed checklist will be retained in the PIKA-ARCADIS JV project file.

2.4 Site Reconnaissance

Prior to startup of drilling or sampling activities in a particular area, field personnel will conduct a brief site reconnaissance to determine if any problems with the drilling or sampling locations will be encountered. The sampling locations will be sketched on the Location Sketch Form (Appendix C). In addition, at the start of field activities at each Site, the field personnel will notify the Hunter Army Airfield environmental staff of the work schedule, and sampling and drilling locations.

2.5 Field Operations Contingency Plans

If during the field program, any unforeseen problems or conditions are encountered that require re-evaluation or corrective action, such as, but not limited to, extreme precipitation events, site emergencies that require evacuation of field personnel, changes in site conditions, security problems, loss of power or communications, or community relations problems, the following contingencies will be put into place:

- For any problem or condition encountered by the field team, the team personnel will immediately notify the Hunter Army Airfield environmental staff and/or the PIKA-ARCADIS JV Project Manager for direction or approval of corrective action.

- If the problem or condition requires downtime at the site and re-evaluation of any site conditions, assumptions made about the site conditions, or plans prepared for the site, the field team will contact the PIKA-ARCADIS JV Project Manager and the Hunter Army Airfield environmental staff for consultation.

- If after consultation, the problem or condition continues, the field program will remain on hold until direction is received from the Hunter Army Airfield representative and/or PIKA-ARCADIS JV Project Manager. The field program will not continue until the problem is resolved.

- Any time these contingency procedures are implemented, the following will be documented in the daily log of activities:

  - Problem or condition encountered;
  - Personnel involved;
  - Management personnel contacted;
  - Corrective actions taken, if any; and
  - Dates and times involved.

2.6 On-Site PIKA-ARCADIS JV Representative

A qualified PIKA-ARCADIS JV representative will be on-site during all probing, drilling and sample collection activities. The PIKA-ARCADIS JV representative will have in their possession a copy of the Site-Specific Work Plan and the associated Site-Wide Work Plans, including the SAP, QAPP, and Health and Safety Plan (HASP). The Site-Wide Work Plans encompass work at all Hunter Army Airfield PBC sites. The PIKA-ARCADIS JV representative will also have on-site any equipment, tools, references, and documentation necessary to collect, describe, and document the information generated from the field activities.

2.7 Contractor Compliance and Permitting

The contractors selected for this project shall comply with any and all installation, local, state, and federal health and safety regulations and requirements. The contractors are responsible, per the PIKA-ARCADIS JV contractual agreements, for securing and/or complying with permits required by state or local authorities. The selected contractors will have the necessary license(s) or certifications required to perform such work in Georgia.

2.8 Adherence to Technical Specifications

All work performed by the PIKA-ARCADIS JV or a subcontractor, whether it be drilling, sampling, equipment decontamination or other related activities will be in accordance with the procedures described in this SAP, and properly and completely documented by the on-site PIKA-ARCADIS JV representative on forms provided herein (Appendix C).

3. Field Investigation Procedures

A detailed discussion of the field procedures that will be employed to complete the field tasks is provided in the following sections. All field procedures are in accordance with the United States Environmental Protection Agency (USEPA) Field Branches Quality System Technical Procedures (USEPA, 2008).

All soil, groundwater, and surface water samples collected will be analyzed by a certified Georgia Laboratory as listed in the Site-Wide QAPP (Appendix A). Samples will be preserved according to the selected analytical method. Specific method preservation requirements, size and type of sample containers to be used, and holding times for each parameter are listed in the Site-Wide QAPP (Appendix A).

3.1 Lithologic Logging

The lithology of the soil and bedrock samples collected will be described through visual observations of the soil/bedrock cores using the Unified Soil Classification System (USCS) and/or the American Society for Testing and Materials (ASTM) International Standard D 2488 for Description and Identification of Soils. The Boring/Well Construction Log (Appendix C) will be used to record lithologic logging observations. The following logging sequence will be used for the description of unconsolidated materials:

- Describe major soil type and percentage;
- Describe composition of the soil;
- Describe the moisture, texture, and color of the soil;
- Document other geologic observations such as bedding characteristics, structure and orientation, and primary and secondary permeability/porosity (if possible); and
- Document observations on drilling progress including sample interval loss and recovery.

3.2 Direct Push Borings and Sample Collection

Direct-push soil sampling consists of hydraulically pushing or driving a small diameter, hollow steel rod to a target depth and collecting a soil or groundwater sample. The equipment necessary for the collection of samples using the direct push technique is mounted on a regular van or truck for ease of mobility. The steel probe rods, 3 feet (ft) to 4 ft in length, are threaded for easy connection and have tight seals to provide a continuous length of rod. The rods are hydraulically driven or hammered to target depths. The steel rods can be driven to depths of up 150 ft through unconsolidated sediments.

3.2.1 Soil Sample Collection

The following procedures will be used during the collection of soil samples from direct push borings:

1. Record borehole location and intended sample depth intervals on the Boring/Well Construction Log (Appendix C).
2. Line the 3-ft or 4-ft steel soil sampler core barrel with an acetate, polyethylene or Teflon liner and attach sampler to end of steel rods.
3. Hydraulically push or drive the 3-ft or 4-ft soil sampler and rods to intended depth. Soil samples will be collected from intervals specified in the Site-Specific Work Plan.
4. Open the core barrel and disassemble revealing the soil core sample within the liner. Label the depths on each end of liner and mark the top and bottom to maintain proper core orientation
5. Remove a portion of the liner over the entire length of the core using an appropriate cutting tool.
6. Screen soils immediately in the field using a photoionization detector (PID) or flame ionization detector (FID) to document the levels of organic vapors present. To collect volatile organic headspace readings, place the soil sample in a sealed plastic bag approximately two-thirds full allowing for approximately 30 percent headspace. Place the bag in a dry area, which is as close to room temperature (70º F) as practical. After 10 minutes, use a PID or FID to measure the vapors that accumulate in the bag due to off-gassing from the sample. Base PID/FID usage on the target analytes. If a PID is used, select

the appropriate lamp based on the target analyte. Record the measurement on the Sample/Core Log.

7. Collect soil sample(s) for laboratory analysis. Don a clean pair of disposable gloves immediately prior to sample collection. VOC samples will be collected directly from the target depth interval of the soil core to minimize disturbance using an EnCore™ sampler or equivalent (Terra Core). Transfer the remaining soil from the target depth interval to a stainless steel bowl. Mix the soil using a stainless steel spoon until the sample is visually uniform. Remove any debris or larger rocks observed during mixing using the spoon. Collect non-VOC analysis samples from the bowl and place in appropriate sample container, label the container, and place on ice. Note on the field sample log the depth interval from which the sample aliquot was collected. The container and preservative requirements for soil samples are outlined in the Site-Wide QAPP (Appendix A). Double-bag the ice used for sample shipment in self-sealing bags prior to placement in the cooler.
8. Extract from the liners the portion of the soil core not submitted to the laboratory for analysis and use for logging purposes.
9. Describe the soil samples in the field. The lithology of the soil will be described by a qualified and experienced PIKA-ARCADIS JV representative through visual observations of the soil core using the USCS or ASTM designation.
10. Place all soil cuttings in drums or roll-off box.
11. Properly decontaminate all down-hole sampling equipment prior to subsequent use in consecutive sample collection. Decontamination procedures are described in Section 3.12.

3.2.2 Groundwater Sample Collection

The following procedures will be used during the collection of shallow groundwater samples from direct push borings. When sampling for metals from direct push borings, both total and dissolved metals will be analyzed to assess the effect of turbidity on the sample results. Polychlorinated biphenyl (PCB) samples will not be collected from direct push borings.

1. Record sampling location and intended sample depth intervals on the Geoprobe® Groundwater Sampling Form (Appendix C).

2. Drive a stainless steel retractable screen attached to the bottom of the hollow steel rods to the target depth beneath the groundwater table. Target depths will be specified in the Site-Specific Work Plan for each Site.
3. Raise rods to approximately 2 to 4 ft to allow the screen to be exposed at the target depth, thus allowing collection of groundwater samples at the target depth.
4. Insert polyethylene or Tygon tubing (1/4-inch diameter) into the hollow rods to allow for collection of grab groundwater samples with a peristaltic pump or dedicated tubing with a check valve assemblage. The tubing with check valve method will be used as the sole means of collecting samples for volatiles organic analysis.
5. Don a clean pair of disposable gloves immediately prior to sample collection. Collect groundwater samples directly into laboratory-prepared, preserved sample bottles and place directly on ice. Fill the sample bottles in the following order: volatile organic compounds (VOCs) first, then remaining analytes.
6. Prepare sample containers according to the container and preservative requirements outlined in the QAPP (Appendix A). Include on the sample label the following: sample identifier, laboratory methodology requested, the sample matrix, date, time, project name, and name of sampler.

3.2.3 Membrane Interface Probe Borings

The Membrane Interface Probe (MIP) is a type of direct push tool, advanced by a standard direct push rig that logs both total VOC concentrations and soil conductivity with depth. The following procedures will be used during the completion of direct push borings using the MIP.

1. Record borehole location on the Boring/Well Construction Log (Appendix C).
2. Hydraulically push the MIP and rods to intended target depth, typically not greater than 60 ft below ground surface (bgs). Because the MIP probe cannot be hydraulically hammered, the MIP probe cannot be driven as deep as conventional Geoprobe® borings.

3.2.4 Temporary Piezometer Installation

Temporary piezometers may be installed in selected Geoprobe® groundwater boring locations in accordance with the Official Code of Georgia Annotated (OCGA) Well

Standards 12-5-134 (State of Georgia, 2008). The temporary piezometer installation procedures are discussed below.

1. After the collection of groundwater samples from the selected Geoprobe® groundwater borings, a temporary piezometer will be installed in the borehole and will be constructed with 10 ft sections of 1-inch to 1¼-inch diameter polyvinyl chloride (PVC) screen and riser.
2. The natural formation will be allowed to collapse around the piezometers.
3. The annular space around the upper 10 ft of the piezometer will be filled with granular bentonite and then hydrated to prevent possible interference from surface water leakage.
4. Because the piezometer is considered temporary, a concrete surface pad will not be installed. Unless otherwise approved by the Georgia Environmental Protection Division (GAEPD), temporary piezometers will be converted to permanent monitoring points or abandoned within 5 days.
5. Each piezometer will be closed with a PVC cap.

3.2.5 Temporary Piezometer Fluid Gauging

Static fluid levels in each temporary piezometer will be gauged using an electronic water-level indicator. Fluid-level measurements will be documented on the Water Level Measurement Form (Appendix C) and will later be converted to mean sea level for reporting purposes.

The following procedures will be implemented when collecting fluid-level measurements:

1. Remove the piezometer cap and document the general condition of the piezometer. In areas where non-aqueous phase liquids (NAPLs) are known to exist or have been present in the past, a PID or FID will be used to check the well for build-up of potentially hazardous gases.
2. Measure static fluid-level elevation using an electronic water-level indicator from fixed reference point (generally the north side of the top of the PVC casing).
3. Repeat the measurements every 5 minutes until two consecutive measurements are obtained that are within 0.01 ft.

Fluid-level measurements will be referenced to a surveyed elevation point located on the top of the piezometer casing. All fluid-level measurements will be taken at least two times to check the reproducibility of the measurement data. If it is found that the measurement cannot be reproduced, a second set of data will be collected. Fluid levels will be collected until the data can be reproduced. This measurement validation process ensures the accuracy of the fluid-level data.

Equipment used to measure the fluid level will be properly decontaminated before first use and between use at each well using the procedures described in Section 3.12.

3.2.6 Direct Push Boring Abandonment

Direct push soil borings installed at the site will be abandoned by allowing the saturated portion of the formation (i.e., unconsolidated sands and gravel) to collapse back into the 2-inch diameter borehole as the Geoprobe® rods are retracted. The upper 10 ft of the borehole will be plugged with granular bentonite and hydrated with potable water to make an impermeable seal.

3.2.7 Temporary Piezometer Abandonment

After the well casing and screen materials from the temporary piezometers have been pulled out of the ground, the borehole will either be filled with granular bentonite or a high solids bentonite-cement slurry mix to within at least three feet of ground surface. If bentonite is used, it will be hydrated with potable water, and the remainder of the borehole will be filled with native soil or clay.

3.3 Drilling Techniques

All soil borings and monitoring wells will be drilled and installed by a Georgia licensed water well driller.

3.3.1 Hollow-Stem Auger Techniques in Soil

Dependent on subsurface soil conditions at the Sites, shallow soil borings may be drilled using hollow-stem auger techniques (ASTM 1452). Soil samples can be collected continuously (if so scoped in a site-specific work plan) using a continuous sampler, or split-spoon sampler (ASTM 1586 and 1587) depending upon percent recovery realized using the continuous core sampler. The following steps outline the

procedures that will be used to drill a shallow borehole for geotechnical or analytical purposes and for the installation of a monitoring well.

1. Record borehole location on the Location Sketch form and intended sample depth intervals on a Boring/Well Construction Log (Appendix C).

2. Clean and assemble the continuous sampler. The continuous core sampler (5 ft in length by 6 inches outside diameter (O.D.) is advanced in the borehole ahead of the augers (8-inch O.D.) and retrieved through the hollow-stem portion of the augers after each 5 ft drilled.

3. Disassemble the core barrel, revealing the soil core sample. Screen the soil samples with a PID/FID and describe in the field using the logging method described in Section 3.1.

4. Collect discrete samples from the core sample based on field screening data (prior to logging) and place in laboratory-prepared glass jars for analytical purposes. The preservation and handling of the samples is discussed in Section 3.4.3.

5. If continuous core sampling is not possible due to the character of the subsurface material encountered, collect samples every 5 ft using a standard split-spoon sampler (2 ft by 2 inch O.D.). Attach the split spoon to the drill rods, insert within the hollow-stem auger, and drive into the unconsolidated deposits using a standard 140-pound drop hammer and rig-driven cathead. Record blow counts for each 6-inch penetration of the split spoon. Drive each split spoon a total of 24 inches.

6. Collect all soil cuttings generated during the drilling of the boreholes and store temporarily on plastic or in a drum or roll-off box while awaiting characterization.

3.3.2 Mud Rotary Drilling

The mud-rotary system consists of a drilling fluid mixture of potable water and bentonite that is pumped down the inside of the drill pipe, and then returned to the surface through the annulus between the drill pipe and the borehole wall. This fluid cools the drill bit, carries the cuttings to the surface, prevents excessive fluid loss into the formation, and

prevents the formation from collapsing. The drilling fluid flows into a mud pit where the cuttings settle out and then is pumped back down the drill rods.

The following steps outline the procedures that will be used for mud rotary drilling.

1. Record borehole location and intended sample depth intervals (if appropriate) on the Boring/Well Construction Log (Appendix C).

2. Drill the deep boreholes from the surface to 1 to 2 ft into the bedrock using a mud rotary drilling rig equipped with a six-inch bit and stabilizer. No formation sampling will be conducted in the deep boreholes.

3. Record any significant or sudden fluid loss or production and soil cutting observations from drilling mud on the Boring/Well Construction Log (Appendix C).

4. Terminate the borehole within the upper 1 to 2 ft of the bedrock surface, which will be determined by the detection of the bedrock fragments in the return mud.

5. Collect all drill cuttings generated during the deep borehole drilling and temporarily stage in either 55-gallon steel drums or a roll-off box while awaiting chemical characterization as discussed in Section 3.13.

3.3.3 Rotasonic Drilling Methodology

Monitoring wells and the soil borings (other than those drilled using direct push methods) will have the option to also be drilled using rotasonic drilling methods. The rotasonic drilling method uses a combination of rotary power, hydraulic pull down pressure, and mechanically generated oscillations to advance a dual line of drill pipe. The top mounted hydraulically powered drill head transmits the rotary power, hydraulic down pressure, and vibratory power directly to the dual line of pipe. The inner drill pipe, measuring from 3-inch to 9-inch I.D., contains a core bit and represents the core barrel sampler. The outer pipe, measuring 4 inches to 12 inches, is used to prevent the collapse of the borehole and is therefore used in the construction of monitoring wells from 1 inch to 8 inches in diameter. This combination of forces advances the inner core barrel sampler through typically difficult unconsolidated deposits and some consolidated formations without the use of mud or air.

Water is not necessary during drilling but may be used in small quantities to help lubricate the drill pipe as it is advanced. Drilling rates are equal to or greater than other conventional rotary methods when they include some method of continuous sampling. The inner drill pipe is always advanced in front of the outer drill pipe. Continuous core samples of 1 foot to 20 ft can be completed depending on job specifications and site conditions.

During typical borehole advancement, the first step is to advance the inner drill pipe and core bit about 6 ft or 10 ft into the ground. Once the inner drill pipe is set, the outer drill pipe is advanced down over the inner drill pipe to hold the boring open. The inner drill pipe is mechanically lifted by the drill head to the surface for core sample recovery. The core sample is vibrated out of the inner drill pipe into a plastic sheath or a stainless steel sample tray. The core sample also can be collected in a split stainless steel or a lexan core barrel liner. The inner drill pipe is then advanced to the top of the next sample interval. These steps are repeated until the desired total depth is reached. Installation of a well would be performed inside the outer drill pipe, which would be removed as the well materials are installed. This will keep the borehole walls from collapsing and ensure that a good sand pack is installed. Monitoring well construction details are discussed in Section 3.5.

All drilling and sampling equipment will be decontaminated according to the procedures outlined in Section 3.12 of this report between each borehole location.

3.4 Collection of Samples for Geotechnical and Chemical Analyses

The procedures for the collection of soil samples during hollow stem auger drilling for geotechnical and chemical analyses are described below.

3.4.1 Geotechnical Samples in Soil and Unconsolidated Deposits

1. Record the soil sample location, depth, date and time of collection, sample identification, name of sampling personnel, and type of drilling and sampling equipment on the Boring/Well Construction Log (Appendix C).

2. Clean and assemble the continuous or split-spoon sampler. The sampler will be fitted with 6-inch long California (brass) rings or equivalent sampler liners, so that soil samples can be retrieved with minimum disturbance for geotechnical analyses.

3. Lower the sampler through the drill stem to the desired sampling depth. If using a split-spoon sampler, drive the sampler with a standard 140-pound hammer free-falling 30 inches in accordance with ASTM Method D1586. Record the number of blows per foot required to drive the split spoon.

4. After the continuous core barrel or split-spoon sampler is retrieved and opened, mark with indelible ink the depths of the sample at the top and bottom of each brass ring. Don a clean pair of disposable gloves immediately prior to sample collection. Using a stainless steel spatula or knife, cut the soil sample between the brass rings. Using plastic caps, cap each end of each ring. Label each ring with the appropriate sample designation.

5. The geotechnical samples do not have to be placed on ice or chilled.

6. Submit to geotechnical laboratory using COC procedures (Section 4.3).

7. From the remaining soil core, conduct field screening and describe soil sample lithology using procedures outlined in Section 3.1.

8. Alternate methodologies that may be used to obtain geotechnical samples, such as the use of a Shelby tube, will be described in the Site-Specific Work Plan for each Site.

3.4.2 Geotechnical Samples in Sediment

The procedures for the collection of geotechnical samples from shallow and deep sediments are outlined below.

1. If standing water is located over the sampling location and a deep sediment sample is to be collected, then the upper sediment and surface water should be removed prior to sample collection. Drive a minimum 4-inch O.D. schedule 40 PVC blank casing into sediment sampling location. Place a wooden board on top of PVC casing while driving casing into sediment to prevent breaking the casing. Use peristaltic pump to remove surface water from casing.

2. If collecting the geotechnical sample at 1.5 to 2.0 ft bgs, remove overburden with a decontaminated stainless steel bucket auger to a depth just above top of sampling depth (i.e., 1.5 ft bgs).

3. Drive a decontaminated 1 to 2-inch diameter stainless steel soil sampler lined with a plastic or acetate liner to depth required. A disposable acetate or thin walled stainless steel soil probe may also be used.

4. If a gravelly substrate is encountered, a decontaminated bucket auger may be used to collect the sample from 1.5 to 2.0 ft bgs.

5. Cap the liner and retract the sampler. The sample core may not remain in the sampler or tube if the top is not capped.

6. Cap the bottom of the sample. If a liner is used, remove the liner from the sampler, then cap the bottom of the sample.

7. If freestanding water was also captured in the sampling tube or liner, remove the top cap and gently pour off the water without disturbing the sediment sample.

8. Don a clean pair of disposable gloves immediately prior to sample collection. If using a bucket auger to collect the geotechnical sample, remove sample from bucket and pack into laboratory container.

9. Document the sample on a Soil/Sediment Sample Log (Appendix C).

10. The geotechnical samples do not have to be placed on ice or chilled.

11. Submit to geotechnical laboratory using COC procedures (Section 4.3).

3.4.3 Samples for Chemical Analyses

The procedures for collection of samples for chemical analyses are outlined below.

1. Record the soil sample location, depth, date and time of collection, sample identification, name of sampling personnel, and type of drilling and sampling equipment on the Boring/Well Construction Log (Appendix C).

2. Clean and assemble the continuous core barrel or split-spoon sampler.

3. Lower the sampler through the drill stem to the desired sampling depth. If using a split-spoon sampler, drive the sampler with a standard 140-pound

hammer free-falling 30 inches in accordance with ASTM Method D1586. Record the number of blows per foot required to drive the split spoon sampler.

4. After the continuous core barrel or split-spoon sampler is retrieved and opened, collect soil samples for chemical analysis. Don a clean pair of disposable gloves immediately prior to sample collection. Collect VOC samples directly from the core barrel or spit spoon sampler using an EnCore™ sampler or equivalent (Terra Core) to minimize sample disturbance. Place the remaining soil sample volume into a stainless steel bowl. Mix the soil using a stainless steel spoon until the sample is visually uniform. Remove any debris or larger rocks from the soil during the mixing process using the spoon. Place the remaining soil samples into their appropriate containers. If the sample material is of size or consistency that an EnCore sampler cannot be used, place the material in a glass 4-ounce container. Immediately store the containers in a cooler on ice at 4º C. Complete the sample label for soil samples selected for analyses.

5. Document the sample on a Soil/Sediment Sample Log.

3.5 Monitoring Well Construction

3.5.1 Shallow and Intermediate Well Construction

The shallow and intermediate wells will be installed in boreholes drilled using hollow-stem auger techniques. Monitoring well construction details will be documented on the appropriate Well Construction Log (Appendix C). No water will be introduced during monitoring well construction unless the borehole conditions require stabilization. If required, the water will be obtained from the Hunter Army Airfield potable water system.

1. The screened interval for all monitoring wells is anticipated to be 5- to 10 foot-sections of factory-milled 10-slot, 2-inch O.D., schedule 40 PVC screen, placed in the bottom of each well. The well screen attached to threaded, flush joint, 2-inch O.D., schedule 40 PVC casing will be inserted in the borehole through the minimum 6.25-inch O.D. hollow-stem auger.

2. The screened interval of the monitoring wells will be specified in the Site-Specific Work Plan for each Site.

3. PVC casing will be threaded to the screen and brought to a height of 3 ft above ground level for completion.

4. The annular space between the well and the borehole wall will be backfilled with a clean, graded, size 20 to 40 silica sand pack that will extend from the bottom of the borehole to a minimum of 2 ft above the top of the screened interval. The sand pack will be placed by tremie pipe from the bottom of the borehole through the hollow-stem augers to ensure complete placement around the well screen. The hollow stem auger will be retrieved as the sand pack is emplaced and can typically serve as the tremie pipe for filter pack placement.

5. Approximately 1 ft of very fine sand grade size 50 or smaller may be emplaced above the filter pack to prevent the migration of the bentonite slurry into the well screen.

6. A minimum thickness of 3 ft of bentonite pellets or chips will be placed on top of the filter pack as a seal. If the seal is within the unsaturated zone at the time of installation, granular bentonite will be placed in one-foot lifts, saturated with potable water, and allowed to hydrate. Hydration time will conform to the manufacturer's recommendations before further work on the well is performed.

7. The annular space from the top of the bentonite seal to within 1 foot beneath the frost line (approximately 30 to 36 inches bgs) will be filled with a cement and bentonite slurry containing high solids mixed to the manufacturer's specifications. Alternatively, cement/bentonite slurry consisting of 8 gallons water and 5 percent bentonite by weight per bag of Portland cement will be used, with a target density of 14 to 15 pounds per gallon. The bentonite slurry will be placed with a tremie pipe from the bottom of the annular area to be grouted to ensure proper placement of the slurry.

8. The remaining annular space near land surface will be filled with concrete. All wells will be completed above grade using a protective steel cover. A concrete apron will be installed around the cover. The apron will be a minimum of 2 ft by 2 ft and 6 inches in thickness, and shall be sloped to promote drainage away from the well. The wells will also be equipped with locking caps.

9. At selected locations, steel guard posts or protective barriers will be installed around the wells in a manner designed to prevent vehicles from accidentally damaging the well.

3.5.2 Pre-pack Screen Monitoring Well Construction

For shallow to intermediate monitoring wells where heaving (flowing) sands are expected to be encountered, an alternative method of monitoring well construction would include the use of pre-packed screens during well construction. Figure 3-1 shows the well schematic for the prepacked screens. The construction of these wells would follow the same steps detailed in Section 3.5.1 with the following exceptions.

1. The screened portion of the monitoring well will consist of 5- to 10-foot sections of pre-packed screen. In the case of 2-inch diameter well, the screen will have a 2.0-inch I.D. and a 3.63-inch O.D. Previous site investigations have shown that the 12-slot screen with a 10 by 20 sand pack will be more than adequate for construction of the monitoring well.

2. Formation material will be allowed to collapse around the screen upon removal of the augers to a point 2 ft above the screened interval.

3.5.3 Monitoring Well Construction Beneath a Confining or Semi-Confining Layer

Installation of monitoring wells beneath a confining or semi-confining layer is outlined in the procedures below. Monitoring well construction details will be documented on the appropriate Well Construction Log.

1. An 8-inch PVC casing will be set 1 foot into the top of the confining unit. The casing will then be grouted around the annulus of the casing to the land surface to seal off the casing from the aquifer. The grout will be allowed to set for a period of time in accordance with the manufacturer's specifications to ensure a proper seal is set.

2. Inside of the casing the bore hole will be completed through the confining layer to the aquifer below to the target depth.

3. Inside of the 8-inch casing, the well will be constructed with 2-inch threaded flush joint, Schedule 40 PVC casing and 2-inch threaded flush joint, Schedule 40 PVC, 0.010-inch continuously mill-slotted screen. Schedule 80 well material

will be used for monitoring wells deeper than 100 ft. Pipe joint compound (glue) will not be used in constructing the monitoring wells. If the depth of the well is to be greater than 50 ft, centralizers above the screened interval may be used to aid in well construction.

4. Casing will be added to the well screen and brought from the top of the screened interval to a height of 3 ft above ground level for completion.

5. The annular space between the well and the borehole wall will be backfilled with a clean, graded, size 20 to 40 silica (or alternative gradation based on site-specific data) sand pack that will extend from the bottom of the borehole to a minimum of 2 ft above the top of the screened interval. The sand pack will be placed by tremie pipe from the bottom of the borehole through the hollow-stem augers to ensure complete placement around the well screen.

6. Approximately 1 ft of very fine sand may be emplaced above the filter pack to prevent the migration of the bentonite slurry into the well screen.

7. A minimum thickness of 3 ft of bentonite pellets or chips will be placed on top of the filter pack as a seal. If the seal is within the unsaturated zone at the time of installation, the bentonite will be saturated with potable water and allowed to hydrate. Hydration time will conform to the manufacturer's recommendations before further work on the well is performed.

8. The annular space from the top of the bentonite seal to within 1 foot beneath the frost line will be filled with a cement and bentonite slurry containing high solids mixed to the manufacturer's specifications. The bentonite slurry will be placed with a tremie pipe from the bottom of the annular area to be grouted to ensure proper placement of the slurry.

9. The remaining annular space near land surface will be filled with concrete. All wells will be completed above grade using a protective steel cover. A concrete apron will be installed around the cover. The apron will be a minimum of 2 ft by 2 ft and 6 inches in thickness, and shall be sloped to promote drainage away from the well. The wells will also be equipped with locking caps.

10. At selected locations, steel guard posts or protective barriers will be installed around the well in a manner designed to prevent vehicles from accidentally damaging the well.

3.5.4 Borehole and Well Abandonment

A Georgia licensed water well driller will abandon all boreholes not used for monitoring well installation, temporary wells, or permanent wells in accordance with the OCGA Georgia Well Standards 12-5-134 (State of Georgia, 2008).

3.5.5 Temporary Well Abandonment

Temporary wells will be abandoned by the following procedures.

1. The monitoring well riser pipe and well screen will be removed from each borehole. The riser pipe and screen will be decontaminated by steam cleaning at the designated decontamination area and will be discarded in a sanitary waste landfill.

2. The entire borehole will be grouted with a cement and bentonite slurry containing high solids mixed to the manufacturer's specifications. The bentonite slurry will be placed with a tremie pipe from the bottom of the annular area to be grouted to ensure proper placement of the slurry.

3. The abandoned borehole will be marked with a flag or stake.

3.5.6 Soil Boring Abandonment

The procedures for abandoning boreholes are as follows:

1. The entire borehole will be grouted with a cement and bentonite slurry containing high solids mixed to the manufacturer's specifications. The bentonite slurry will be placed with a tremie pipe from the bottom of the annular area to be grouted to ensure proper placement of the slurry.

2. The abandoned borehole will be marked with a flag or stake to allow for surveying.

3.6 Groundwater Level Measurements and Sampling

3.6.1 Groundwater Level Measurements

Water level measurements will be referenced to a surveyed elevation point located on the top of the well casing. This measurement point will be surveyed by a Certified Land Surveyor and referenced to ft above mean sea level (amsl). An electronic water level probe will be used to gauge the water level in the new wells, in addition to the existing monitoring wells and piezometers at the facility.

Water levels will be recorded in the new monitoring wells, existing monitoring wells and piezometers within 24 hours prior to each groundwater sampling event. The total well depth may also be measured at this time to determine if sediment has accumulated in the well thereby reducing the effective well depth. Water level measurements at each Site will begin with the upgradient wells (i.e., inferred least contaminated wells) and proceed to the downgradient wells (i.e., inferred most contaminated wells). Water-level measurements will be collected within a single 24-hour period and will be measured twice to check the reproducibility of the measurement data. This measurement validation helps ensure accuracy with regard to the water level data collection. The procedure for obtaining water level measurements is as follows:

1. Describe the area surrounding the well, whether or not the lock was secure (if applicable), if the well could have been impacted by surface water runoff, ambient weather conditions and other factors that could affect the final data analysis. This documentation is recorded on a Water Level Measurement Form) Appendix C).

2. Decontaminate the electronic water probe prior to initiating water level measurements and between all wells and piezometers. Decontamination procedures are described in Section 3.12.

3. Unlock the protective casing and remove the inner cap on the riser.

4. Check the probe to verify that it is operational, then lower down the monitoring well.

5. If the well is not vented, allow the water level to equilibrate for a few minutes prior to collecting the first measurement. Take fluid level measurements from a

fixed reference point (the north side of the top of the PVC riser) using an electric tape graduated in 0.01-foot intervals.

6. Repeat the measurements until two measurements are obtained that are within 0.01 ft.

7. Remove and decontaminate the probe, replace the inner cap, and lock the protective casing.

3.6.2 Low-Flow Groundwater Purging and Sample Collection

The following protocol has been developed to obtain groundwater samples that are representative of formation conditions and is intended for use in sampling monitoring wells during the field activities. New monitoring wells will not be sampled for at least 24 hours following non-stressful means of well development (e.g., purging with submersible pump or bailer) and 48 hours following stressful means of well development (e.g., air lift, surge and purge). Monitoring wells will be purged prior to collecting groundwater samples to ensure that representative formation water is being sampled. The monitoring wells will be purged and sampled in the same order as that for water-level measurements (upgradient to downgradient, or least contaminated to most contaminated where known based upon prior sampling results). Prior to introduction into the well, all non-dedicated equipment and materials will be decontaminated in accordance with the procedures outlined in Section 3.12.

The following procedures will be implemented when performing well purging prior to sample collection:

1. Put on clean latex or vinyl surgical gloves or nitrile gloves.

2. Unlock the metal protective casing, remove the well cap, and document the general condition of the well.

3. Determine static fluid-level elevation using electronic probe. Record on Groundwater Sampling Form (Appendix C).

4. Compute the volume of water in the well (0.162 gallon/foot for a 2-inch diameter well). The volume of water to be purged will be computed based on the total well depth recorded upon the completion of well installation. The total depth will be measured periodically during the monitoring program to determine if

sediment has accumulated in the well thereby reducing the effective well volume. If it is determined that sediment has accumulated in the well, then the new well depth will be used to compute the volume of water to be purged.

5. Insert the pre-cleaned bladder (or peristaltic) pump and tubing into the well to the midpoint of the well screen. Record installation time in field notes. Dedicated Teflon and/or PVC bailers may be used to facilitate sample collection where site conditions warrant, such as low recovery wells.

6. Start pump at the lowest possible flow rate and adjust the pumping rate to approximately 100 milliliters per minute (mL/min). Record pump start time in field notes. Verify the flow rate with the graduated cylinder or equivalent by collecting the water from the discharge line for one minute. Record results in field notes. Based on the recovery rate of the well, the pump may need to be raised or lowered to adequately purge the entire well column. Adjustments will be recorded in the field notes.

7. Monitor water level to verify that little or no drawdown (0 to 0.3 ft) is occurring in the well. If desired, the flow rate may be increased to up to 300 mL/min in more permeable formations as long as little or no drawdown is observed in the well. Record measurements and flow rates in field notes.

8. Obtain field parameter measurements (temperature, specific conductance, pH, dissolved oxygen, oxidation-reduction potential [ORP], and turbidity) every 5 minutes and record on the Groundwater Sample Log. Purge until the criteria listed below have been met (unless low well recovery precludes this):

   - The field parameters stabilize to within +/- 10 percent of three consecutive meter readings taken at least 5 minutes apart.

   - The measured turbidity is less than 10 nephelometric turbidity units (NTUs), unless low recovery precludes this.

9. Collect VOC samples for laboratory analysis (if required) at a low flow rate (100 mL/min) directly into the appropriate sample container. If a peristaltic pump is used, the downhole tubing will be filled using suction and removed from the well to prevent the sample from contacting the pump head. The pump speed is reduced and the direction reversed to push the sample out of the tubing and into the sample containers. Ensure that no air bubbles are present in the vial.

Secure sample container lid and store sample containers in chilled cooler after filling out the sample label.

10. Collect additional samples for non-VOC analysis (collecting in the order of explosives, metals, and indicator parameters). If samples are being collected usig a persitaltic pump following VOC sample collection, repeat steps 1 through 8. Collect non-VOC samples at low flow rate (100 mL/min). Flow rates of up to 500 mL/min can be used if all stabilization criteria are achieved. Unless specified in the site-specific work plan, metals samples will be collected unfiltered. If site conditions require filtration for metals analysis, an in-line 45 micron filter will be used. Secure sample container lids and store sample containers in chilled cooler.

11. Complete sampling documentation on the Groundwater Sampling Form, record the collection date and time on the sample key, and fill out the Well Sampling Summary form (Appendix C).

12. If inadequate water is present in the well to fill the required sample containers, return periodically within 24 hours until adequate sample volume is obtained and field parameters measured. Collect groundwater for individual analyses in the appropriate sample order. If required, collect VOCs and store first, then metals and other indicator parameters.

13. If drawdown in the well cannot be maintained within the 0.3-foot requirement, sample collection will be performed after three well volumes of groundwater have been purged. Begin sample collection with VOC analysis unless otherwise noted in the site-specific work plan. For wells that purge dry before all of the samples are collected, allow the well to recover and then make one more attempt to collect the remaining samples within a 24-hour period.

14. Turn off pump. Remove portable pump from well and decontaminate or dispose. Tubing will be left as dedicated tubing in the well or disposed of after use.

15. Determine the total depth of the well. Compare the measurement of the total depth of the well with previous measurements and well construction log to determine available screen length. Record on water sampling log. If more than 20 percent of a well screen is occluded by sediment, the well must be redeveloped prior to collecting future groundwater quality samples. Samples

collected prior to the total well depth measurement will be representative only if the field data indicate that the well met stabilization criteria prior to sampling.

16. Replace cap on well and protective casing lock well.

3.6.3 Slug Test

This procedure defines the requirements for conducting a slug test in a monitoring well. The purpose of this procedure is to provide a uniform basis for conducting slug tests and to ensure the continuity between field personnel. A water level indicator will be used to measure the change in water levels versus time during the slug test. However, for slug tests completed in wells screened in very permeable formations, a transducer and data logger may be used to measure and record water level changes over time.

1. Open the locking and vented caps and inspect the wellhead. Note in particular the condition of the surveyed reference mark, if any.

2. Measure and record the static water level and the depth to the bottom of the well. Record this data on the Water Level/Pumping Test Record (Appendix C).

3. Lower the slug into the water until it is fully submerged. Allow the well to equilibrate to static water level.

4. Verify the static water level has been reestablished with an electronic water-level indicator.

5. Withdraw the slug quickly, but avoid surging. Record the time of withdrawal to the second. Start the stopwatch, if used, at the instant the slug is withdrawn.

6. Using an electronic water level indicator, measure and record the initial displacement of water as soon as the slug has been withdrawn.

7. Measure and record the rise in water level vs. time. Using the water-level indicator and a stopwatch, record depth-time data at the fastest rate possible for the first 5 minutes of well recovery. Generally the water levels should be recorded every 30 seconds for the first 5 minutes, then every minute for the next 5 minutes. Subsequent recording intervals may be adjusted to suit the rate of well recovery. An electronic data logger and pressure transducer may be used in lieu of manual water level measurements.

8. Continue recording depth-time data until the well has recovered to nearly the static water level or at least 90 percent of the static water level. If 90 percent of the static water level has not been achieved within 2 hours, then field personnel may return periodically within the next 24 hours to record the water level.

9. Record the time of test completion in the field data forms.

10. Decontaminate all equipment according to the procedures outlined in Section 3.12. Close and lock the well before leaving.

3.6.4 Constant Rate Pump Test

1. Upon arriving at the site, collect a round of static water levels from all site monitoring wells. Record this data on the Water Level/Pumping Test Record (Appendix C).

2. Place the pump in the pumping well and connect to the electrical service. The pump discharge will be connected to 1) a control valve, 2) inline filter (optional), and 3) flow meter. Dependent on site conditions, treatment systems (i.e., flow-through vessels, carbon units) may be used prior to water storage or discharge.

3. Initiate a short step test beginning at 2 gallons per minute (gpm). The initial step test pumping rate may be altered depending on site specific conditions. The pumping rate will be increased in two subsequent steps (the amount of increase will be determined in the field based on the drawdown achieved at 2 gpm). Measure water levels in the pumping well and the three closest monitoring wells during the step test.

4. Based on the results of the step test, determine a pumping rate that will 1) achieve significant drawdown in the pumping well, and 2) will not result in dewatering the well during the pumping test.

5. Begin the pumping test after the water levels in the pumping well and observation wells have returned to static conditions.

6. Turn on the pump in the test well and operate at a constant rate during the remainder of the test.

7. Collect water levels at a logarithmic interval in the pumping well, monitoring wells within 100 ft of the pumping well, piezometers within 100 ft of the pumping well, and at least one background well. Collect the water levels using a handheld electronic water level indicator or through the use of pressure transducers.

8. After the test has been conducted for a period of 24 hours, evaluate the pump test data to determine if continuation of the pump test is justified. If so, continue the test for a total of 48 hours, or until the data indicate that asymptotic conditions were achieved.

9. When the determination has been made to stop the pumping test, initiate the recovery portion of the test.

10. After the pump has been shut off, measure water levels at a logarithmic interval in the pumping well, monitoring wells within 100 ft of the pumping well, piezometers within 100 ft of the pumping well, and the selected background well. Continue measurements until the water level in the pumping well has recovered at least 90 percent.

3.6.5 LNAPL Bail Down Test

This procedure defines the requirements for conducting an LNAPL Bail Down Test in a monitoring well. The purpose of this procedure is to measure the thickness and depth to free product in the well as it recovers. The results of these tests are analyzed in accordance with techniques described in “How to Effectively Recover Free Product at Leaking Underground Storage Tank Sites,” (EPA 510-R-96-001) to assist choice of potential free product recovery methods. The following steps will be used:

1. Measure the depth to LNAPL and groundwater.

2. Remove as much LNAPL from the well as possible using a weighted disposal bailer.

3. Measure the recovery rate of free product and groundwater using a hydrocarbon probe. Record the LNAPL thickness and recovery time in the well at regular intervals until the recovery rate has stabilized.

4. Determine 80 percent of the maximum LNAPL recovery thickness.

5. Interpolate the recovery time for 80 percent recovery.

6. Compute gallons per foot of LNAPL thickness in the well screen.

7. Compute the average recovery rate in gallons per day to 80 percent recovery.

3.7 Test Pit Excavations

The following procedures may be used to install test trenches, if deemed necessary to characterize waste materials.

1. Complete a trench to approximately 4 ft bgs with a track hoe or equivalent piece of excavation equipment.

2. Describe the profile of waste based on visual observations of the material removed from the trench and record on a Boring/Well Construction Log (Appendix C).

3. Backfill the trench with waste material after the trench has been completed.

4. Cover the trench with compacted soil.

5. Mark the trench area with a stake for surveying purposes.

3.8 Sediment Sampling

The following procedures will be used to collect sediment samples during the field activities at Hunter Army Airfield.

3.8.1 Shallow Ditch Sediment Sampling

1. Sediment samples will be collected with a decontaminated stainless steel trowel or hand auger. Decontamination procedures are outlined in Section 3.12. A stainless steel hand auger or trowel will be used to collect sedimentsoils from the 0 to 0.5-foot (6-inch) interval.

2. The sediment sample will be placed directly into a stainless steel bowl. The sediment will be mixed using a stainless steel spoon until the sample is

visually uniform. During the mixing process any debris or larger rocks will be removed using the spoon.

3. The sample will be transferred from the bowl into a laboratory-prepared sampling containers supplied by the laboratory.

4. The sample will be documented on a Soil/Sediment Sample Log and the Soil Sample Summary Form.

Surficial soil samples will be collected from ditch areas that may be dry or have no freestanding water at the time of sampling. The following dry ditch sediment sampling procedures should be used only if the ditch is dry or has no freestanding water:

1. Prior to sample collection, any rocks, vegetation or debris will be removed with a stainless steel trowel.

2. Surficial soil samples will be collected with a decontaminated stainless steel trowel or hand auger. Decontamination procedures are outlined in Section 3.13. A stainless steel hand auger or trowel will be used to collect soils from the 0 to 0.5-foot (6-inch) interval.

3. The soil sample will be placed directly into a stainless steel bowl. The soil will be mixed using a stainless steel spoon until the sample is visually uniform. During the mixing process any debris or larger rocks will be removed using the spoon.

4. The sample will then be transferred from the container into the laboratory-prepared sampling containers supplied by the laboratory. The sampling activities will be documented on a Soil/Sediment Sample Log and the Soil Sample Summary Form.

5. Following sampling, the sample location will be filled in and any removed rocks or vegetation replaced.

3.8.2 Deep Ditch Sediment Sampling

1. Remove overburden with a decontaminated stainless steel bucket auger to just above the top of the prescribed sampling depth.

2. Drive a decontaminated 1 to 2-inch diameter stainless steel soil sampler lined with a plastic or acetate liner an additional 6 inches in depth. A disposable acetate or thin walled stainless steel soil probe may also be used.

3. Use a decontaminated bucket auger to collect the sample from 1.5 to 2.0 ft bgs if a gravelly substrate is encountered.

4. Cap the liner and retract the sampler. The sample core may not remain in the sampler or tube if the top is not capped.

5. Cap the bottom of the sample. If a liner is used, remove the liner from the sampler, then cap the bottom of the sample.

6. If freestanding water was also captured in the sampling tube or liner, remove the top cap and gently pour off the water without disturbing the sediment sample. Place the sediment sample directly into a stainless steel bowl. Mix the sediment using a stainless steel spoon until the sample is visually uniform. Remove any debris or larger rocks from the sediment during the mixing process using the spoon.

7. The sample will then be transferred from the container into the laboratory-prepared sampling containers supplied by the laboratory.

8. Document the sample on a Soil/Sediment Sample Log and the Soil Sample Summary Form.

Subsurface soil samples may be collected from ditch areas that may be dry or have no freestanding water at the time of sampling. The following dry ditch sediment sampling procedures described below should be used only if the ditch is dry or has no freestanding water:

1. Prior to sample collection, any rocks, vegetation or debris will be removed with a stainless steel trowel.

2. A decontaminated stainless steel hand auger will be used to collect soils from the prescribed depth interval. The collected soil sample will be placed directly into a stainless steel bowl. The soil will be mixed using a stainless steel spoon until the sample is visually uniform. During the mixing process any debris or larger rocks will be removed from the soil using the spoon.

3. The sample will then be transferred from the container into the laboratory-prepared sampling containers supplied by the laboratory. The sampling activities will be documented on a Soil/Sediment Sample Log and the Soil Sampling Summary Form.

4. Following sampling, the sample location will be filled in with surrounding sediment.

3.8.3 Shallow Stream Sediment Sampling

Stream sediment samples may be collected along predetermined transects upstream, adjacent to, and downstream of the area of interest in conjunction with surface water sampling for the characterization of the aquatic environment. Please note that the sediment samples may have to be collected by personnel outfitted with waders.

The sediment sampling procedures are described below and assume that all samples can be collected by personnel outfitted with waders that can access all sampling locations on a transect.

1. Position identification markers for the sediment and surface sampling locations along the stream bank prior to sampling. At each transect, mark and stake opposite banks of the stream to support a rope premarked at least at 10-foot intervals or measuring tape pulled taut across the stream slightly above water level. Each tape mark will become a station for a depth sounding of the river and a point for flow velocity measurements. For streams that are 10 ft in width or less, only one sampling station is required at the stream mid-point.

2. Measure the water velocity and flow using a current meter. Measure flow velocity at each station and at each 5-foot depth interval to the base of the stream. In every case, collect a flow measurement at the base and upper surface of the stream.

3. Briefly describe the substrate beneath each station as marked on the rope, such as silt, sand, gravel, and bedrock. In this manner, select the site for sediment sampling. Preferred sediment sample collection locations are areas of deposition, where fine-grained materials, such as clay, silt, or fine sand, collect. In addition, collect samples in pools, rather than riffles. The dredge sampler may not function properly if the substrate being sampled contains a large amount or large pieces of gravel.

4. Approach the sampling location from downstream to avoid disturbing the sediment prior to sampling.

5. Collect the sediment samples using an Ekman or Ponar dredge or equivalent. Gently advance the dredge approximately 6 inches into the sediment. The dredge closes with a messenger weight and the spring-loaded jaws shut to collect the sediment sample. A minimum of three aliquots will be collected at each sampling location.

6. Place the sediment samples directly into a clean stainless steel bowl. If VOC samples are to be collected, they should be taken directly from the sampling device using an EnCore™ sampler or equivalent (Terra Core). If the VOC samples cannot be collected from the sample device, they can be collected immediately after placement of the sediment in the stainless steel bowl. Following VOC sample collection, the remaining sediment will be mixed using a stainless steel spoon until the sample is visually uniform. During the mixing process any debris or larger rocks will be removed using the spoon.

7. Fill the appropriate laboratory jars for the non-VOC parameters specified in the Site-Specific Work Plan. Attach the lids and label appropriately. Complete the Soil Sample Summary Log (Appendix C).

8. With the remaining sediment sample, record the sediment characteristics, such as texture, odor, color, and other distinguishing factors on a Soil/Sediment Sample Log (Appendix C).

9. Remove the rope marking the transect, if not collecting deep sediment samples. Do not remove the stakes marking the transect. Survey the elevation of the stakes to a known elevation datum to provide a depth profile of the river.

3.9 Surface Water Sampling

Surface water samples may be collected along predetermined transects upstream, adjacent to, and downstream of the area of interest in conjunction with stream sediment sampling for the characterization of the aquatic environment. Please note that the surface water samples will have to be collected using a small boat or by personnel outfitted with waders. The optimum time to collect the surface water samples will be at a low stream flow so that personnel outfitted with waders can collect the samples.

Using a boat to collect the samples introduces special health and safety concerns and typically doubles the amount of time required to complete the task.

The surface water sampling procedures are described below and assume that all samples can be collected by personnel outfitted with waders that can access all sampling locations on a transect.

1. Follow steps 1 and 2 outlined in the stream sediment sampling procedure outlined in Sections 3.8.3.

2. At each transect, collect a surface water sample near the top of the water column with a clean Pyrex sampling cup or equivalent for field measurement of temperature, pH, specific conductance, and dissolved oxygen. An equivalent flow-through meter may also be used for each field parameter.

3. At locations that are deeper than 5 ft, collect the field measurements at each 5-foot depth interval using a Van Dorn or Kemmerer Type sampler.

4. Record the field measurements in a Surface Water Sample Log (Appendix C).

5. If the stream does not exhibit thermal or chemical stratification as determined by the field measurements (temperature and pH), collect a surface water sample with a clean Pyrex sampling cup or equivalent near the top of the water column. Immerse the Pyrex cup at an angle such that water gently flows in with minimal disturbance. Use the sample to fill laboratory-prepared sample bottles for analysis.

6. If the stream exhibits thermal or chemical stratification as determined by the field measurements (temperature and pH), then collect surface water samples every 5 ft using a Van Dorn or Kemmerer style water sampler.

7. Record the sampling location, date and time of collection, sample collection method, sample identification, sample preservative, methods of analysis, and initials of the sampling personnel on the Surface Water Sample Log (Appendix C).

8. Decontaminate the sampling equipment as described in Section 3.12.

3.10 Field Analytical Measurements

Several instruments may be used to collect field analytical data. These instruments include a pH meter, specific conductance meter, a thermometer, dissolved oxygen meter, and turbidity meter (nephelometer). The following equipment (including model number and manufacturer) will be used:

- pH meter (model SA-230) manufactured by Orion Research, Inc. or equivalent;
- Specific conductivity meter (model 0148-40) manufactured by Cole-Palmer Instrument Company or equivalent;
- Digital thermometer that meets the National Bureau of Standards requirements;
- Dissolved oxygen meter (model 810) manufactured by Orion Research, Inc. or equivalent; and
- Turbidity meter (model 800) manufactured by Engineered Systems or equivalent.

Field instruments will be calibrated at least once a day, and more often if conditions warrant. Calibration procedures will follow manufacturer's specifications and will be documented by field personnel on the Field Instrument Calibration Log (Appendix C).

3.11 Quality Control Samples

To monitor sampling and laboratory performance it may be necessary to collect several types of field QA/QC samples. The field QA/QC samples include trip blanks, equipment rinsate blanks, and field duplicates. The specific number and type of QA/QC samples that will be collected at each Site are outlined in the Site-Specific Work Plans and may be more or less than the criteria stated below based upon data quality objectives and professional judgment.

A trip blank is a container filled with distilled and organic-free water prepared in, and provided by, the analytical laboratory. A trip blank is sent from the analytical laboratory to the field-sampling site, and is returned to the laboratory for analysis. The trip blank results are used to evaluate whether contamination by VOCs occurred during shipment of samples and/or during container transport. One trip blank is required in each sample cooler transporting samples for VOC analysis.

An equipment rinsate blank is a sample of organic free water (for VOC analyses) poured into, or over, or pumped through the sampling device, collected in the sample bottle, and transported to the laboratory for analysis. Equipment rinsate blanks are used to assess the effectiveness of equipment decontamination procedures.

Equipment rinsate blanks are collected immediately after the equipment has been decontaminated. Equipment rinsate blanks are collected by gently pouring distilled or deionized water over selected clean non-dedicated equipment and collected for laboratory analysis. For example, the equipment rinsate blank for soil and sediment sampling programs will be collected by gently pouring distilled or deionized water over clean core barrels or soil core samplers. The equipment rinsate blank for surface water and groundwater sampling programs will be collected by gently pouring distilled or deionized water over clean non-dedicated bailers or sampling cups. Equipment rinsate blanks will be collected at a frequency of 5 percent of the field samples at critical points in the sampling program, such as the sampling of a background well or the end of the sampling program.

The frequency requirements for collecting equipment rinsate blanks are a minimum of five percent of the environmental samples. The blank shall be analyzed for all laboratory analyses requested for the environmental samples collected at the Site. When an analyte is detected in the equipment rinsate blank the appropriate validation flag, as described in the data validation section, shall be applied to all sample results from samples collected. It should be noted that the laboratory will supply the organic free water. A sample aliquot of the organic free water will be submitted for the analysis of all parameters of interest.

A field duplicate sample is a second sample collected at the same location as the original sample. Duplicate samples are collected simultaneously or in immediate succession, using identical recovery techniques, and treated in an identical manner during storage, transportation, and analysis. The sample containers are assigned an identification number in the field such that they cannot be identified (blind duplicate) as duplicate samples by laboratory personnel performing the analysis. Specific locations are designated for collection of field duplicate samples prior to the beginning of sample collection. A field duplicate will be collected at a rate of one per twenty samples or one per sampling event, if less than twenty samples.

Field duplicate sample results are used to assess precision, including variability associated with both the laboratory analysis and the sample collection process. Field duplicates will be collected at a frequency of 5 percent of samples collected. Analytical

results for field duplicate will be assessed during the data validation process. Specific locations will be designated for collection of field duplicate samples prior to the beginning of sample collection. Control limits for evaluation of precision for field duplicates will be 40 percent for aqueous samples and 70 percent for soil/sediment samples.

Laboratory quality assurance protocols including the performance of laboratory control samples and matrix spikes relating to method acceptance criteria are included in Section 2.7 of the Site-Wide QAPP (Appendix A). The QAPP also defines the data qualification guidelines for evaluating potential matrix interferences identified during matrix spike analyses. The parent and field duplicate sample will be included in all reporting.

3.12 Field Equipment Decontamination

The cleaning procedures outlined in this section will be used by all personnel to clean sampling and other field equipment to prevent cross-contamination during separate phases of the investigation. Documentation regarding decontamination will be recorded on the Daily Log (Appendix C). Specific cleaning procedures are presented in the following section.

A decontamination area will be established where steam cleaning of the drilling and well construction equipment and materials can occur and containment and proper disposal of wash water is possible. An impervious decontamination area will be utilized and the water used to clean the equipment will be containerized for offsite disposal.

3.12.1 Cleaning Materials

The laboratory detergent used to wash the equipment will be a standard brand of phosphate-free laboratory-grade detergent such as Micro or Liquinox. The use of any other detergent must be justified and documented in the field logbooks and inspection or investigative reports.

Potable water is defined as tap water fit for human consumption from a known source. Deionized water is defined as tap water that has been treated by passing through a standard deionizing resin column. The deionized water should contain no metals or other inorganic compounds (i.e., at or above analytical detection limits). The brushes used to clean equipment as outlined in the following sections, will be stiff plastic bristled and will not be wire-wrapped.

3.12.2 Marking and Segregation of Used Field Equipment

Field or sampling equipment that needs to be repaired shall be identified with a tag indicating date repair requested, problem if known, personnel requesting repair, and if the equipment has been decontaminated. Field equipment needing cleaning or repairs will not be stored with clean equipment or sample containers. Field equipment and/or disposable sample containers that are not used during the course of an investigation may not be placed in storage without being recleaned unless it is the opinion of the field investigator that the materials have not become contaminated during the course of the field investigation. However, equipment and sample containers must be labeled as such.

3.12.3 Safety Procedures to be Utilized During Cleaning Operations

The materials used to implement the cleaning procedures outlined in this section can be dangerous if improperly handled. Caution must be exercised by all personnel, and all applicable safety procedures shall be followed. At a minimum, the following precautions will be taken in the field during these cleaning operations:

- Safety glasses with side shields or goggles, and latex or vinyl surgical gloves or nitrile rubber gloves will be worn during all cleaning operations;
- All rinsing operations will be conducted in the open (never in a closed room); and
- No eating, smoking, drinking, chewing, or any hand-to-mouth contact shall be permitted during cleaning operations.

3.12.4 Storage of Field Equipment and Sample Containers

Decontaminated field and sampling equipment will be stored in covered containers or wrapped in aluminum foil to minimize contamination. All decontaminated equipment, when not in use, will be kept in a designated storage area. Sampling equipment and sample containers will not be stored or transported with any gasoline, diesel, or other fuel containers or gasoline or diesel fuel powered equipment. Decontaminated equipment shall be clearly identified by labeling the wrapping material. Field equipment and reusable sampling containers requiring cleaning or repairs shall not be stored with clean equipment. Instead, equipment requiring repairs will be clearly identified and the repairs documented on the daily field log. Field equipment that requires cleaning

will be segregated from clean equipment and will be stored on plastic sheeting pending cleaning.

3.12.5 Cleaning Procedures

3.12.5.1 Drilling and Direct Push Equipment

All drilling and direct push equipment used during completion of soil borings or installation of the monitoring wells will be steam-cleaned prior to initiating drilling or direct push activities. This will include, but is not limited to, the drill stem, augers, drill bits, direct push rods, core barrels, and tools utilized by the contractor.

The drill rig or direct push rig utilized for the installation of the borings and wells will be decontaminated at the decontamination area prior to the initiation of the drilling or direct push activities. The drill rig or direct push rig itself will not be decontaminated between soil boring or monitoring well locations. Augers and other drilling, direct push, or sampling equipment will be returned to the decontamination area to be cleaned after each use. Cleaning of equipment will be performed using a high-pressure steam cleaner to prevent cross-contamination of the soil borings and monitoring wells. Potable water for steam cleaning will be obtained from the installation water supply system.

Tools and equipment used to measure the depth of well completion materials and water levels (i.e., measuring tapes, electric/electronic probes, tampers, tremie pipes) also will be decontaminated by steam cleaning between well locations to avoid cross-contamination. All equipment and tools will be isolated from contact with the ground by placing them onto sheets of polyethylene plastic.

3.12.5.2 Teflon™, Stainless Steel, or Glass Field Sampling Equipment

When Teflon™, stainless steel, or glass sampling equipment is used to collect samples that contain hard to remove materials, it may be necessary to steam clean the field equipment before proceeding with Step 1. If the field equipment cannot be cleaned utilizing these procedures, it should be discarded.

1. Wash equipment thoroughly with laboratory detergent and tap water using a plastic brush to remove any particulate matter or surface film.

2. Teflon™, stainless steel, or glass sampling equipment will be rinsed thoroughly with potable water from an approved onsite source.

3. Rinse thoroughly with analyte free water.

4. Rinse thoroughly with solvent. Do not solvent rinse PVC or plastic items.

5. Rinse thoroughly with organic/analyte free water. If organic/analyte free water is not available, equipment should be allowed to completely dry. Do not apply a final rinse with analyte water.

6. Wrap equipment completely with aluminum foil or store in Ziploc™ plastic bags to prevent contamination during storage and/or transport to the field.

3.12.5.3 Other Sampling Equipment

Miscellaneous sampling equipment will be washed with laboratory detergent, rinsed with potable water, followed by a thorough deionized water rinse, and dried before being stored. This procedure is not used for any equipment utilized for the collection of samples for trace organic compounds analyses.

3.12.5.4 Trace Organic Sampling Equipment

The following procedures are to be used for all sampling equipment used to collect routine samples undergoing trace organic or inorganic constituent analyses:

- Clean with tap water and soap using a brush if necessary to remove particulate matter and surface films. Equipment may be steam cleaned (soap and high pressure hot water) as an alternative to brushing. Sampling equipment that is steam cleaned should be placed on racks or saw horses at least two ft above the floor of the decontamination pad. PVC or plastic items should not be steam cleaned;

- Rinse thoroughly with tap water;

- Rinse thoroughly with analyte free water;

- Rinse thoroughly with solvent. Do not solvent rinse PVC or plastic items;

- Rinse thoroughly with organic/analyte free water. If organic/analyte free water is not available, equipment should be allowed to completely dry; and

- Remove the equipment from the decontamination area and cover with plastic. Equipment stored overnight should be wrapped in aluminum foil and covered with clean, unused plastic.

3.12.5.5 Field Analytical Equipment and Other Field Instruments

The exterior of sealed, watertight equipment should be washed with a mild detergent (for example, liquid dishwashing detergent) and rinsed with tap water before storage. The interior of such equipment may be wiped with a damp cloth if necessary. Other field instrumentation should be wiped with a clean, damp cloth. Conductivity probes, pH meter probes, etc., should be rinsed with deionized water before storage.

3.12.5.6 Ice Chests and Shipping Containers

If the ice chests (labeled accordingly for sampling use) and reusable containers that will be used to store or ship samples and sample containers are believed to be contaminated, the containers should be washed with laboratory detergent (interior and exterior) and rinsed with potable water and air dried before storage. In the event that an ice chest or other reusable container becomes severely contaminated with concentrated waste or suspected hazardous material, it shall be cleaned as thoroughly as possible, rendered unusable, and disposed of properly.

3.12.6 Disposable Materials

Disposable materials generated from the decontamination and sampling activities will be contained in plastic garbage bags. These materials include, but are not limited to gloves, Tyvek suits, latex booties, paper and plastic. A waste determination will be made on a site by site basis for the disposable materials generated during the sampling programs. The waste determination will be based on both process knowledge of the contents of the site and on existing analytical data from the site, if available. The wastes will be disposed off-site in accordance with all applicable federal and state regulations.

3.13 Characterization and Disposal of Investigative Derived Wastes

Investigative derived wastes (IDW) including soil and waste cuttings and decontamination, development, and purge water will be collected and characterized with the procedures described below.

3.13.1 Soils/Sediment/Waste

Soil, sediment, and waste cuttings (not including material excavated from test trenches during waste characterization) will be collected at the borehole and stockpiled on plastic sheeting or placed in appropriate containers, such as a roll-off box or 55-gallon drum for temporary storage. The temporarily stored solid material will be covered to prevent runoff.

Specific disposal options will be made on a site by site basis, taking into account the types of compounds known to be present, and will conform to applicable installation, local, state, and federal requirements.

3.13.2 Water

Investigative derived water, which will consist of decontamination wash, well development, and purge water, will be temporarily containerized in a portable poly tank. Based on previous and/or current analyses, liquids that would not fail Toxicity Characteristic Leaching Procedure (TCLP) analysis will be properly disposed of in accordance with Georgia State laws. Disposal options will be evaluated on a site by site basis.

3.14 Site Survey

A site survey will be conducted by a registered land surveyor to measure elevations (X, Y, and Z coordinates) of any new monitoring wells. The north side of the top of the casing and the land surface adjacent to each well will be surveyed relative to mean sea level to the nearest 0.01 ft. The horizontal location of each monitoring point and well will also be determined relative to the Georgia state plane system and the Hunter Army Airfield installation grid to the nearest 1.0 foot. All surveying will be performed by a certified land surveyor, and will be tied into the existing on-site benchmark.

The location of each soil and waste boring, test pit location, sediment, surface water, and stream gauging location may also be surveyed by hand-held global positioning

system (GPS) equipment, as conventional land surveying will be difficult to complete at these areas.

4. Field Documentation Procedures

Information on the sample designation, field documentation, COC, and sample shipment activities are discussed in the following three sections.

4.1 Sample Designation

A numbering system was developed for each type of environmental sample collected during the field investigation for the unique identification of each individual sample. This number system will provide a tracking procedure to allow ease of data retrieval, reduction, and evaluation, and to ensure that sample identifiers are not duplicated. The most important aspect of any sample numbering system that is developed is ensuring the uniqueness of an individual sample number. A listing of the sample identification numbers will be maintained by the project manager and the field task supervisor will ensure that it is universally applied to samples collected during the project.

The numbering system for this project consists of the following components described below:

- The Site number in the format “HA##” for Hunter Army Airfield;
- The location type;
- The sample number;
- Water and sediment sample IDs will end with the date (in “mmddyy” format); or
- Soil samples will end with the depth range (in ft).

Blind duplicate samples will be labeled sequentially starting at 1 in the form D1(mmddyy).

Examples of the numbering system are provided below:

- Surface water sample 1 taken from HAA-01 on November 8, 2009 would be: HA01SW001(110809);

- Surface soil sample 4 taken from FST-13 at a depth of 0 to 6 inches would be: FS13SS004(0-0.5).

The location type codes are listed below:

MW – monitoring well;
TW – temporary well;
SB – soil boring (by drilling);
SS – surface soil by trowel or other hand collection method;
SW – surface water by any collection method; and
SE – sediment by any collection method.

In addition to the above nomenclature, the COC will be completed to include both the Sample Type and Sample Matrix using the codes defined below:

Acceptable sample type codes are listed below:

N = normal or primary sample;
FD = field duplicate;
EB = equipment blank;
MS = matrix spike;
SD = matrix spike duplicate; and
TB = trip blank.

The sample matrix will be identified using the following codes:

SO = soil sample;
SE = sediment sample;
WG = groundwater;
WS = surface water;
WB = water collected from borehole or during Geoprobe® investigation; and
WL = leachate.

Field duplicate samples will be given a unique number that is completely different from the original sample following the normal sample pattern. Duplicate samples will be labeled sequentially starting at 1 in the form D1(mmddyy). This number will be recorded in the field logbook, so that the duplicates can be identified at a later date. Samples collected with an additional volume for matrix spike/matrix spike duplicates (MS/MSDs) will be designated on the COC in the remarks column.

Equipment and trip blanks will be identified using the sample type code (i.e., EB or TB) followed by the date as MMDDYY. For trip blanks, if more than one trip blank is submitted to the laboratory on a given day, the sample code will be followed by the a number starting with 1. For example the second trip blank submitted on December 1, 2003 would be identified as follows: TB2(120103).

4.2 Field Activity Documentation

Documentation of field operations and sample custody is achieved through use of PIKA-ARCADIS JV pre-printed forms and a bound field logbook. The field log consists of notes and drawings describing the location, field conditions, and method of sample collection and identification. Examples of the pre-printed forms that will be used for this project are provided in Appendix C.

All aspects of sample collection and handling as well as visual observations shall be documented on the forms or in the field logbooks. All sample collection equipment (where appropriate), field analytical equipment, and equipment utilized to make physical measurements shall be identified in the field logbooks. All calculations, results, and calibration data for field sampling, field analytical, and field physical measurement equipment shall be recorded on the forms or in the field logbooks.

In addition, the Field Operations Leader will fill out a daily site activity log that details the activities and/or issues that occurred that day.

All entries in field logbooks or the preprinted sampling logs shall be dated, legible, and contain accurate and inclusive documentation of an individual's project activities. At the end of each day's activity, or of a particular event as appropriate, all documents in the field will be secured by the Field Operations Leader for each task. Once completed, these field logbooks and/or preprinted forms will be maintained as a part of the project files.

All data forms will be completed in indelible black ink. Make an entry in each blank. Where there is no data entry, enter “UNK” for Unknown, “NA” for Not Applicable, or “ND” for Not Done. To change an entry, the person making the change will draw a single line through the mistake, add the correct information above or adjacent to it, and initial the change.

4.2.1 Utilities and Structures Checklist

The Field Operations Leader will check the proposed drilling, sampling, and trenching locations for marked underground utilities, other underground structures and above-ground pipe racks or power lines. A Utilities and Structures Checklist will be completed by the Field Operations Leader for each area to be sampled prior to commencement of field activities.

4.2.2 Location Sketch

All drilling, sampling, and trenching locations will be drawn on a Location Sketch, if a reasonable site map is not available for the area of interest.

4.2.3 Boring/ Well Construction Logs

All soil borings, boreholes, and monitoring well installations completed by the field team will be documented on Boring/Well Construction Logs. The logs document the drilling location, drilling dates and times, drilling personnel, logging personnel, soil descriptions, sample depths, recovery, boring location and volatile organic vapor content. The log also documents the well identification, drilling method, development technique, well construction materials, material depths, and abandonment, if any.

4.2.4 Water Level Measurement Form

All water level measurements will be recorded on a Water Level Measurement Form. The log identifies the measurement location, and measurement date and time.

4.2.5 Sample Key

All samples to be collected will be recorded on the Sample Key. The form identifies all sample locations, sample date and time, and analytical parameters to be collected.

4.2.6 Sampling Location Survey Summary

The sampling location survey summary is to be completed prior to field activities. It will provide northing, easting, and elevation information for site monitoring wells.

4.2.7 Water Sample Log

All surface water samples collected by the field team will be documented on a Water Sample Log. The log identifies the sample identification, duplicate identification, if any, sampling times, location, equipment used, color, odor, appearance, sample parameters, container description, sample preservative, and sampling personnel.

4.2.8 Groundwater Sampling Form

The results of field measurements while purging monitoring wells, prior to collecting a groundwater sample, will be recorded on the Groundwater Sampling Form. This form records time series measurements of conductivity, temperature, turbidity, redox potential, and dissolved oxygen. The form also provides a record of the volume of water purged prior to sample collection.

4.2.9 Well Sampling Summary

A summary of the results of field measurements while purging monitoring wells, prior to collecting a groundwater sample, will be recorded on the Well Sampling Summary Form. This form records collection date and time and the final measurements of conductivity, temperature, turbidity, redox potential, and dissolved oxygen. The form also provides a record of the volume of water purged prior to sample collection.

4.2.10 Water Level/Pumping Test Record

The data from slug tests and pumping tests completed in monitoring wells will be documented on a Water Level/Pumping Test Record. The log identifies the well the test is conducted in, the static water level, the initial displacement, and changes in the water level versus time.

4.2.11 Soil/Sediment Sample Log

All soil samples collected by the field team will be documented on a Soil/Sediment Sample Log. The log identifies the sample identification number, soil type, duplicate

identification, if any, sampling times, depth and location of sample, sampling equipment used, color, odor, appearance, sample parameters, container description, sample preservative, and sampling personnel.

4.2.12 Soil Sampling Summary

All soil samples collected by the field team will be documented on Soil Sampling Summary form. The form identifies the sample identification, sampling times, depth and location of the sample.

4.2.13 Surface Water Sample Log

All surface water samples collected by the field team will be documented on a Surface Water Sample Log. The log identifies the sample identification, duplicate identification, if any, sampling times, sampling location, equipment used, color, odor, appearance, sample parameters, container description, sample preservative, and sampling personnel.

4.2.14 Field Instrument Calibration Form

The field team will record all daily calibration results for field instrumentation on the Field Instrument Calibration Form.

4.2.15 Daily Log

The Daily Log form is used by the Site Manager to record all pertinent sampling events, field observations or other information pertinent to the field effort. The following types of information are generally entered into the Daily Log:

- Date
- Client
- Field Location
- Ambient Weather Conditions
- Field Team
- Instrument Problems
- Site Visitors
- Delays
- Unusual Situations
- Well Damage
- Accidents
- Work Progress
- Quality Control
- Site Schedule

4.2.16 Sample Label

All samples collected by the field team will be properly identified by labeling. Labels will be affixed to the sample bottle prior to the filling of the container(s). Labels are never affixed to lids or caps, although the sample identification information may duplicated on the cap for ease of sample identification. The following labeling information is supplied for every sample bottle.

- Sample Identification Number
- Initials of Sample Collector
- Date and Time of Collection
- Project Number
- Project Location
- Requested Analyses

4.2.17 Chain-of-Custody Form

The COC form is a multi-copy record, which documents the custody of the samples from sample collection through laboratory analysis. It has spaces for signatures of those receiving and relinquishing the samples. The sampler, the individual preparing the samples for shipment, and the receiving individual at the laboratory normally sign the form. An example of this form is provided in Appendix C.

The field personnel collecting the sample will fill out the COC forms. The COC process will be initiated upon sample collection. The field personnel who sign the form will be responsible for the samples until they are transferred to the custody of the laboratory or another custodian. Once the form has been completed, all remaining field sample identification spaces will be crossed through to prevent unauthorized addition of sample information.

The information required on the COC form includes the complete sample identification, date and time of sample collection, number of sample containers, analyses and method required, container type, project number, sample collection personnel, complete name, address, and telephone number of the person analytical reports will be sent to, turnaround time, and signatures of all sample custodians, excluding shippers, such as Federal Express. In addition, the method of shipment, courier name and air bill number must be included. The back copy of the form will be retained. The original form will accompany the sample shipment to the laboratory.

4.2.18 Chain-of-Custody Seal

All coolers submitted to analytical laboratories containing samples collected during the field investigations will be sealed with two signed and dated COC seals. The seals ensure that the samples have not been tampered with during shipment.

4.2.19 Bill of Lading

A bill of lading (air bill) documents receipt of the samples by the carrier. It is not possible for the carrier's representative to sign the COC because it is sealed in the ice chest. Bills of lading are kept on file as part of the sample COC documentation.

4.3 Chain-of-Custody Procedures

The primary objective of the COC process is to create an accurate written record that can be used to trace the possession and handling of the sample from the moment of its collection through analysis. A sample is considered to be in custody when one of the criteria listed below has been satisfied:

- The sample is in one's actual possession.
- The sample is in one's view after being in one's physical possession.
- The sample is in one's physical possession and is then locked up so that no one can tamper with it.
- The sample is kept in a secured area that is restricted to authorized personnel.

Strict COC procedures will be followed for all collection, handling, and shipping of environmental samples. The field personnel are responsible for the care and custody of the sample collected until the samples are properly and formally transferred to another person or a courier for shipment to the laboratory. To simplify the COC record, as few people as possible will handle the sample during the investigation or inspection and an inventory of the sample containers will be maintained.

A COC form will be completed for all samples collected. A separate COC record will be utilized for each cooler of samples shipped to each laboratory used during this investigation. During the data validation activities, it will be determined whether these procedures were adequately followed.

4.3.1 Transfer of Custody

A COC form will accompany all samples. Prior to shipment or transfer of custody, all samples will be maintained in the custody of the Field Operations Leader. Upon transfer of custody, the Field Operations Leader will verify the information on each sample label and assure that each container is intact and sealed. The Field Operations Leader will then sign and date the COC form. The individuals receiving the samples shall sign, date, and note the time that they reviewed the samples on the COC form. This form documents transfer of custody of samples from the field investigator to another person to the laboratory.

4.3.2 Sample Preparation and Shipment

All samples will be stored at approximately 4°C from immediately after collection until analysis. In the field and during transportation to the laboratory, samples will be kept in coolers on ice, not "blue ice". Ice for coolers will be double-bagged in self-sealing plastic bags. Protective foam or Styrofoam packing will be used to minimize the risk of breakage during transport. When packaging samples for commercial transport, individual bottles will be wrapped separately in padded materials.

The samples are then placed in an ice chest, in direct contact with the ice, lined with a plastic trash bag or other barrier to prevent leakage and Styrofoam, bubble wrap, or similar packaging to prevent breakage. The top two copies of the original COC form will be placed in a plastic bag secured inside the shipping container closed with a chain-of-custody seal.

4.3.3 Laboratory Sample Receiving

After the ice chests are delivered to the laboratory, the samples are logged in, the COC is signed, and the samples are checked for breakage or leakage. The temperature of the ice bath is checked. If the temperature exceeds 4° C or if any other problems are noted, this information is recorded on the COC and the Field Operations Leader or Project Manager will be notified of the problem.

5. References

American Society for Testing and Materials (ASTM) International, 1991. *ASTM D-2488-84, Practice for Description and Identification of Soils (Visual – Manual Procedures), Annual Book of ASTM Standards, American Society for Testing and Materials, Philadelphia, vol. 04.08* 1991.

Oficial Code of Georgia Annotated (OCGA), 2008. *Georgia Well Standards 12-5-134* (State of Georgia, 2008).

United States Environmental Protection Agency (USEPA), 2008. Field Branches Quality Systems and Technical Procedures, http://www.epa.gov/region4/sesd/fbqstp/. November 2008.

USEPA, 1996. *"How to Effectively Recover Free Product at Leaking Underground Storage Tank Sites*," (EPA 510-R-96-001), September 1996.

Figure

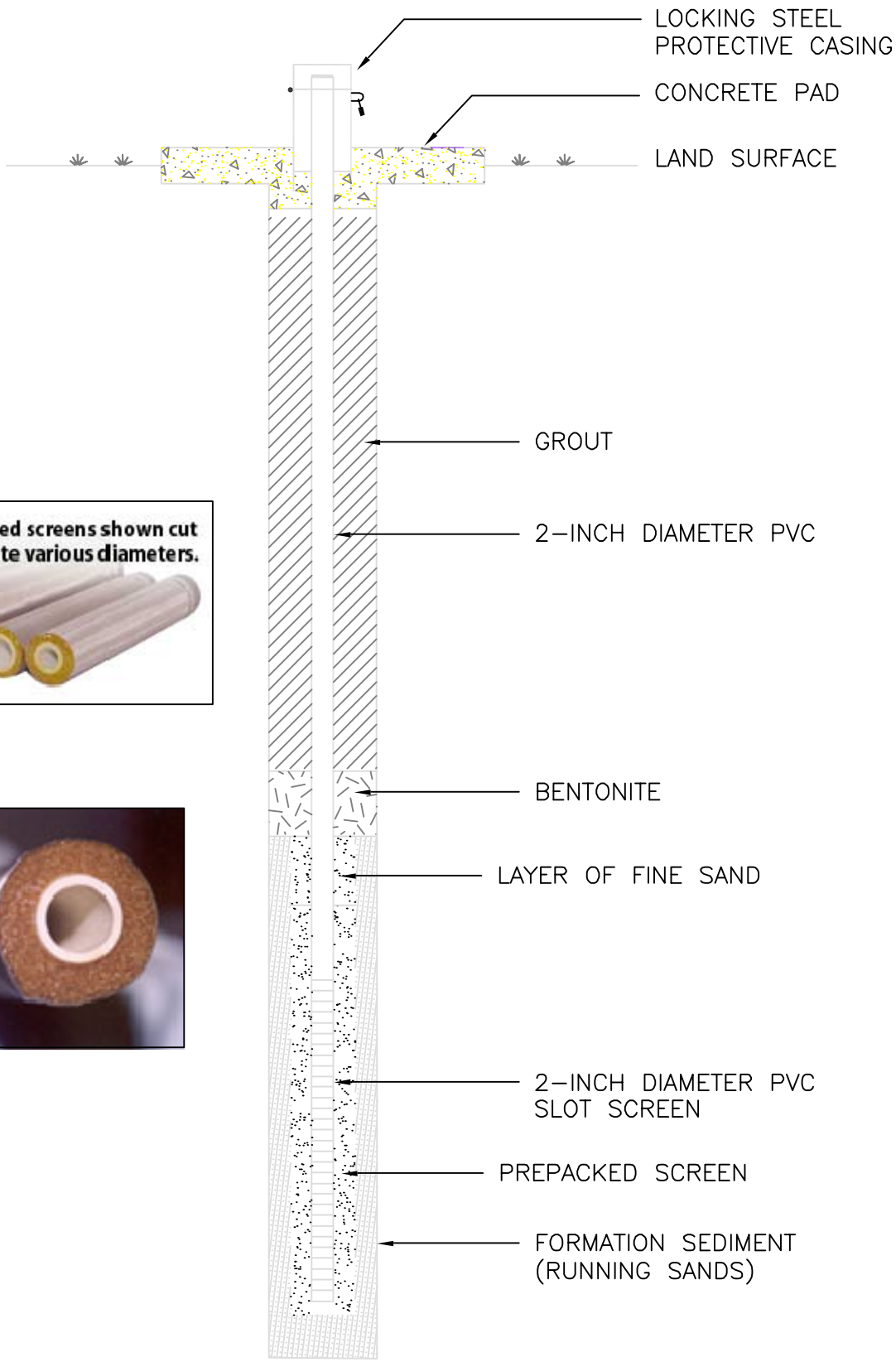

NOT TO SCALE

ARCADIS	PRJT MANAGER:	CHECKED BY:	WELL SCHEMATIC FOR WELL WITH PREPACKED SCREEN	FIG-NO
	DRAWING:			3-1
	PRJT NO:			
	DWG DATE:	DRAFTER:		

Appendix A

Site-Wide QAPP

Signature Page

Appendix A: Quality Assurance Project Plan

Hunter Army Airfield,
Georgia

Rachelle Borne
ARCADIS Project Chemist

Shelley Gibbons
ARCADIS Project Manager

Paul Higgs
USAEC Remedial Project Manager

Amy Potter
GAEPD Unit Coordinator

Lead Organization:
US Army Environmental Command
(USAEC)

Prepared by:
ARCADIS
801 Corporate Center Drive
Suite 300
Raleigh
North Carolina 27607
Tel 919.854.1282
Fax 919.854.5448

Our Ref.:
10153001.0001

Date:
October 2014
Revision 1 - March 2015

This document is intended only for the use of the individual or entity for which it was prepared and may contain information that is privileged, confidential, and exempt from disclosure under applicable law. Any dissemination, distribution, or copying of this document is strictly prohibited.

1. Introduction 1-1

2. Site Background and Environmental Program Status 2-1

2.1 Site Location and History 2-1

2.2 Current Mission 2-1

2.3 Site Setting and Hydrogeology 2-1

2.4 Types and Sources of Contaminants 2-2

2.5 Corrective Action Chronology 2-3

2.5.1 HAA-01 (Fire Training Site) 2-3

2.5.2 HAA-13 (Pump House #1, Release #1) 2-4

2.5.3 HAA-13 (Pump House #1, Release #2) 2-4

2.5.4 HAA-15 (MCA Barracks Site) 2-5

2.5.5 HAA-17 (TCE Groundwater Contamination) 2-7

2.6 Project Objectives and Technical Approach 2-8

2.6.1 HAA-01, HAA-15, and HAA-17 2-8

2.6.2 HAA-13 Pump House #1 2-9

2.6.2.1 Release #1 2-9

2.6.2.2 Release #2 2-9

3. Project Management 3-1

3.1 Project Personnel and Responsibilities 3-1

4. Problem Definition/Background 4-1

4.1 HAA-01 Former Fire Training Area (FTA) and the Departure/Arrival Airfield Control Group (DAACG) 4-1

4.1.1 Site Description and History 4-1

4.1.2 Hydrogeology 4-2

4.1.3 Potential Sources 4-2

4.1.4 Potential Human Receptors 4-3

4.1.5 Potential Human Exposure Pathways 4-3

4.1.6 Potentially Exposed Ecological Receptors 4-4

4.1.7 Potentially Complete Ecological Exposure Pathways 4-5

4.2 HAA-13 – Pumphouse #1 4-5

4.2.1 Site Description and History 4-5

4.2.1.1 Pump House #1 Release #1 4-6

4.2.1.2 Pump House #1 Release #2 4-7

4.2.2 Hydrogeology 4-8

4.2.3 Potential Receptors and Exposure Pathways 4-8

4.3 HAA-15 - MCA Barracks Site 4-9

4.3.1 Site Description and History 4-9

4.3.2 Hydrogeology 4-9

4.3.3 Potential Sources 4-10

4.3.4 Potential Human Receptors 4-10

4.3.5 Potential Human Exposure Pathways 4-11

4.3.6 Potential Ecological Receptors 4-11

4.3.7 Potential Exposure Pathways for Ecological Receptors 4-12

4.4 HAA-17 Problem Definition/Background 4-12

4.4.1 Site Description and History 4-12

4.4.2 Hydrogeology 4-13

4.4.3 Potential Sources 4-13

4.4.4 Potential Human Receptors 4-14

4.4.5 Potential Human Exposure Pathways 4-14

4.4.6 Potentially Exposed Ecological Receptors 4-15

4.4.7 Potentially Complete Exposure Pathways for Ecological Receptors 4-15

4.5 QAPP Objectives 4-16

4.6 Data Quality Objectives for Measurement Data 4-16

4.6.1 Precision, Accuracy, Representativeness, Completeness, and Comparability 4-16

4.6.2 Objectives for Laboratory Analyses 4-19

4.6.3 Objectives for Field Measurements 4-19

4.7 Specialized Training and Certification 4-19
4.8 Documents and Records 4-20
4.8.1 Document Control 4-20
4.8.2 Field Documentation 4-20
4.8.3 Corrections to Field Documentation 4-21
4.8.4 Photographs 4-21
4.8.5 Laboratory Data Reporting/Record Retention 4-21
4.8.6 Electronic Data Retention 4-22
5. Data Generation and Acquisition Elements 5-1
5.1 Sampling Process Design 5-1
5.2 Sampling Methods 5-1
5.3 Sample Handling and Custody 5-1
5.4 Sample Containers 5-2
5.5 Sample Preservation and Holding Times 5-2
5.6 Analytical Methods 5-3
5.6.1 Standard Laboratory Analytical Procedures 5-3
5.7 Elements of Quality Control 5-4
5.7.1 Laboratory Control Samples 5-5
5.7.2 Matrix Spike and Matrix Spike Duplicate 5-5
5.7.3 Surrogates 5-6
5.7.4 Internal Standards 5-6
5.7.5 Retention Windows 5-7
5.7.6 Method Blank 5-7
5.7.7 Equipment Blank 5-7
5.7.8 Trip Blank 5-8
5.7.9 Field Duplicates 5-8
5.8 Instrument/Equipment Testing, Inspection, and Maintenance 5-9
5.8.1 Maintenance Schedules 5-9

5.8.2 Spare Parts 5-9
5.9 Instrument/Equipment Calibration and Frequency 5-10
5.10 Inspection/Acceptance of Supplies and Consumables 5-10
5.11 Non-Direct Measurements 5-10
5.12 Data Management 5-11
5.12.1 Electronic Data Management 5-11
5.12.2 Field Data Review 5-12
5.12.3 Laboratory Data Review 5-12
5.12.3.1 Laboratory Internal Review 5-13
5.12.3.2 Analytical Report and Data Management 5-13
5.12.4 Archiving 5-14
6. Assessment and Oversight 6-1
6.1 Assessment and Response Actions 6-1
6.1.1 Peer Review 6-1
6.2 Corrective Action 6-1
6.3 Performance and Data Quality Reports 6-2
7. Data Validation and Usability 7-1
7.1 Data Review, Verification, and Validation 7-1
7.2 Verification and Validation Methods 7-1
7.2.1 Evaluation of Completeness 7-2
7.2.2 Evaluation of Compliance 7-3
7.2.2.1 Tier 2 Verification 7-3
7.2.2.2 Tier 3 Validation 7-4
7.2.3 Data Validation Reporting 7-5
7.2.4 Validation Reports 7-6
7.3 Reconciliation with Data Usability Requirements 7-6
8. References 8-1

Tables

A-1 Project Team Contact Information and Document Distribution Information

A-2 Project Data Quality Objectives

A-3 Statistical Calculations

A-4 Field Data Quality Objectives and Field QC Collection Frequency

A-5 Method, Containers, Preservation, and Holding Times

A-6 Laboratory Quality Control Sample Frequency

Figures

A-1 Site Map

A-2 Project Organization

A-3 HAA-01 Site Layout Map

A-4 Conceptual Site Model for Potential Human and Ecological Receptors for HAA-01

A-5 HAA-13 Pumphouse #1 Release #1 Site Layout Map

A-6 HAA-13 Pumphouse #1 Release #2 Site Layout Map

A-7 HAA-15 Site Layout Map

A-8 Conceptual Site Model for Potential Human Receptors for HAA-15

A-9 Conceptual Site Model for Potential Ecological Receptors for HAA-15

A-10 HAA-17 Site Layout Map

A-11 Conceptual Site Model for Potential Human Receptors for HAA-17

A-12 Conceptual Site Model for Potential Ecological Receptors for HAA-17

Attachments

A-1 Project Personnel Sign-Off Sheet

A-2 Project Scoping Session Participants Sheet

A-3 Reference Limits and Evaluation Table

A-4 Project Sampling SOP References Table

A-5 Analytical SOP References Table

Acronyms and Abbreviations

°C	Degrees Celsius
µg/L	Micrograms per liter
ACL	Alternate concentration limit
ARCADIS	ARCADIS U.S., Inc.
AST	Aboveground storage tank
ATL	Alternate threshold limits
Bgs	Below ground surface
BTEX	Benzene, toluene, ethylene, and xylene
CaP	Calcium peroxide
CAP	Corrective action plan
CERCLA	Comprehensive Environmental Response, Compensation, and Liability Act
CFR	Code of Federal Regulations
COC	Chain-of-Custody
CSM	conceptual site model
DAACG	Departure/Arrival Airfield Control Group
DoD	Department of Defense
DQM	Data Qualification Module (Earthsoft ®)
DQO	Data Quality Objectives
EB	Equipment blank
EDD	Electronic data deliverable
ERD	enhanced reductive dehalogenation
FHSO	Field Health and Safety Officer
FS	Feasibility Study
Ft	Feet
Ft/day	Feet per day
ft/ft	Feet per foot
FTA	Fire Training Area
GADNR	Georgia Department of Natural Resources
GAEPD	Georgia Environmental Protection Division
GC	Gas Chromatography
GC/MS	Gas Chromatography/Mass Spectrometry

HAAF	Hunter Army Airfield
HASP	Health and Safety Plan
HGL	HydroGeoLogic, Inc.
IRA	Interim Removal Action
IS	Internal Standard
JV	Joint Venture
LCS	Laboratory control sample
LCSD	Laboratory control sample duplicate
LTO	Laboratory Task Order
MCA	Military Construction Account
MDL	Method detection limit
Mg/kg	Milligrams per kilogram
MNA	Monitored natural attenuation
MS	Matrix spike
MSD	Matrix spike duplicate
NELAP	National Environmental Laboratory Accreditation Program
ORM	oxygen-releasing material
PBA	Performance Based Acquisition
PIKA	PIKA International, Inc.
PP	Proposed Plan
QA	Quality Assurance
QAM	Quality Assurance Manual
QAO	Quality Assurance Officer
QAPP	Quality Assurance Project Plan
QC	Quality Control
QCP	Quality Control Plan
RI	Remedial Investigation
RL	Reporting Limit
ROD	Record of Decision
RPD	Relative Percent Difference
RSD	Relative standard deviation
SAP	Sampling and Analysis Plan
SDG	Sample Delivery Group

Shealy	Shealy Environmental Inc.
SOPs	Standard Operating Procedures
SOW	Scope of Work
TB	Trip blank
TCE	Trichloroethylene
UFP	Uniform Federal Policy
USAEC	United States Army Environmental Command
USEPA	United States Environmental Protection Agency
USFW	Us Fish and Wildlife Services
USGS	US Geological Survey
UST	Underground storage tank
USTMP	Underground Storage Tank Management Program
VOCs	Volatile organic compounds

Crosswalk to Uniform Federal Policy (UFP) Quality Assurance Project Plan (QAPP) Required Information

UFP QAPP Worksheet #	Required Information	Crosswalk to Related Information
A. Project Management and Objectives		
Documentation		
1	Title and Approval Page	Signature Page
2	UFP-QAPP Identifying Information	Introduction (Section 1)
3	Distribution List	Table A-1
4	Project Personnel Sign-Off Sheet	Attachment A-1
Project Organization		
5	Project Organizational Chart	Figure A-2
6	Communication Pathways	Section 3.1 (Project Personnel and Responsibilities)
7	Personnel Responsibilities and Qualifications Table	Section 3.1 (Project Personnel and Responsibilities); Section 5.1 (Assessment and Oversight); Section 6 (Data Validation and Usability)
8	Special Personnel Training Requirements Table	Section 3.8 (Specialized Training and Certification)
Project Planning/Problem Definition		
9	Project Scoping Session Participants Sheet	Attachment A-2
10	Problem Definition	Section 3.2 (Problem Definition/Background)
11	Project Quality Objectives/Systematic Planning Process Statements	Section 4.12 (Data Management); Table A-2; Site-Specific Work Plans
12	Measurement Performance Criteria Table	Section 4.6 (Data Quality Objectives for Measurement Data)
13	Secondary Data and Limitations Table	Site-Specific Work Plans
14	Summary of Project Tasks	Section 2.5 (Project Objectives and Technical Approach); Site-Specific Work Plans
15	Reference Limits and Evaluation Table	Section 6.3 (Reconciliation with Data Usability Requirements); Attachment A-3
16	Project Schedule/Timeline Table	Site-Specific Work Plans
B. Measurement/Data Acquisition		
Sampling Tasks		
17	Sampling Design and Rationale	Section 2.5 (Project Objectives and Technical Approach); Section 3.2 (Problem Definition/Background); Site-Specific Work Plans

18	Sampling Locations and Methods/Standard Operating Procedure (SOP) Requirements Table Sample Location Map(s)	Site-Specific Work Plans
19	Analytical Methods/SOP Requirements Table	Section 4.6.1 (Standard Laboratory Analytical Procedures); Table A-5
20	Field QC Sample Summary Table	Section 4.6.3 (Objectives for Field Measurements); Table A-4
21	Project Sampling SOP References Table	Attachment A-4
22	Field Equipment Calibration, Maintenance, Testing, and Inspection Table	Section 5.8 (Instrument/Equipment Testing, Inspection, and Maintenance); Section 5.9 (Instrument/Equipment Calibration and Frequency
Analytical Tasks		
23	Analytical SOPs Analytical SOP References Table	Attachment A-5
24	Analytical Instrument Calibration Table	Section 5.9 (Instrument/Equipment Calibration and Frequency)
25	Analytical Instrument and Equipment Maintenance, Testing, and Inspection Table	Section 5.8 (Instrument/Equipment Testing, Inspection, and Maintenance); Section 5.9 (Instrument/Equipment Calibration and Frequency)
Sample Collection		
26	Sample Handling System, Documentation Collection, Tracking, Archiving and Disposal, and Custody SOPs Sample Handling Flow Diagram	Section 4.3 (Sample Handling and Custody)
27	Sample Custody Requirements	Section 4.3 (Sample Handling and Custody)
Quality Control Samples		
28	Laboratory Quality Control (QC) Samples Table	Section 2.7 (Elements of QC); Table A-6
Data Management Tasks		
29	Project Documents and Records Table	Section 3.9 (Documents and Records); Section 4.12.4 (Archiving)
30	Analytical Services Table	Attachment A-5
C. Assessment Oversight		
31	Planned Project Assessments Table	Section 5 (Assessment and Oversight)
32	Assessment Findings and Corrective Action Responses Table	Section 5.2 (Corrective Action)
33	Quality Assurance (QA) Management Reports Table	Section 5.3 (Performance and Data Quality Reports)
D. Data Review		

34	Verification (Step I) Process Table	Section 6.1 (Data Review, Verification, and Validation); Section 6.2 (Verification and Validation Methods)
35	Validation (Steps IIa and IIb) Process Table	Section 4.12 (Data Management)
36	Validation (Steps IIa and IIb) Summary Table	Section 6.2.2 (Evaluation of Compliance)
37	Data Usability Assessment Table	Section 6.3 (Reconciliation with Data Usability Requirements)

1. Introduction

The PIKA International, Inc. (PIKA) - ARCADIS U.S., Inc. (ARCADIS) Joint Venture (the JV) has been retained by the United States Army Environmental Command (USAEC) to perform environmental remediation services at Hunter Army Airfield (HAAF), located in Savannah, Georgia (Figure A- 1). Corrective action activities performed at HAAF are executed under the Comprehensive Environmental Response, Compensation, and Liability Act (CERCLA) or the Georgia Underground Storage Tank Management Program (USTMP). The Georgia Environmental Protection Division (GAEPD) is the approval entity for this project. This Generic Quality Assurance Project Plan (QAPP) has been prepared to guide the environmental restoration activities at the following HAAF sites:

- HAA-01 – Fire Training Site;
- HAA-13 – Pump House #1;
- HAA-15 – Military Construction Account (MCA) Barracks Site; and,
- HAA-17 – Trichloroethylene (TCE) Groundwater Contamination.

The full scope of services for this contract is defined in the Environmental Remediation Multiple Award Contract W91ZLK-13-D-0009, Delivery Order 0004 as executed between the USAEC and the PIKA-ARACDIS JV. All work performed under the contract will be consistent with all applicable regulatory requirements, and relevant Department of Defense (DoD) and Army policy.

This QAPP presents the policies, organization, functions, and Quality Assurance (QA) requirements designed to achieve the data quality objectives for additional contaminant delineation, groundwater monitoring, and remedial attainment to be performed in support of the environmental restoration as identified in the Performance-Based Acquisition (PBA) contract. This QAPP has been prepared for use by field personnel, data quality reviewers, and laboratories who perform environmental activities to ensure that the data are scientifically valid and usable for the intended purpose. Analytical protocols and documentation requirements will ensure that the data are collected, reviewed, and analyzed in a consistent manner. The method performance criteria and the analytical laboratory quality management program, as well as the protocols set forth in this QAPP, will be employed to establish data usability.

The general guidelines followed in the preparation of this QAPP are presented in USEPA Requirements for QAPPs for Environmental Data Operations, USEPA QA/R-5 (USEPA, March 2001) and the UFP-QAPP Manual (United States DoD) DTIC ADA 427785; EPA-505-B-04-900A, EPA-505-B-04-900B, and EPA-505-B-04-900C, 2005. The USEPA document was used as guidance and this QAPP presents only the applicable components. Other documents that have been referenced in this QAPP are presented in Section 6.

Personnel participating in the work effort will review this document. All personnel are required to comply with procedures documented in this QAPP and supporting project documents to ensure usability of the data produced.

2. Site Background and Environmental Program Status

2.1 Site Location and History

HAAF is located in Chatham County, in the southwestern portion of Savannah, Georgia and covers approximately 5,400 acres. The airfield is bounded on the north by lightly populated areas, on the east and south by residential and light commercial areas, and on the west by the Little Ogeechee River.

Historically, HAAF served as the site of the first Savannah Municipal Airport, a graded grass airfield constructed in 1929. Construction of three intersecting asphalt runways in the middle of the current concrete parking apron and a new hangar was completed in 1936. In 1940, the United States Army Air Corps received approval to build a base at Hunter and official dedication of the airfield as Savannah Army Air Base took place in 1941. In 1946, the airfield was returned to the City of Savannah and was returned to the role of a civilian airport. In 1950, the base reopened as Hunter Air Force Base and Chatham Field became the Savannah Municipal Airport. Finally, in 1967, the Army acquired Hunter from the United States Air Force for use as a flight-training center, operating in conjunction with Fort Stewart.

2.2 Current Mission

The current mission of HAAF is to provide command, control, training, administration, logistical, and civilian-military support to non-divisional units stationed at Fort Stewart and HAAF. Aircraft based at HAAF currently include combat, transport, and training aircraft.

The airfield is also used for overseas mobilization of troops and equipment. HAAF features a runway that is 11,375 feet (ft) long and an aircraft parking area that is more than 350 acres. The runway and apron, combined with the 72,000 square ft Arrival/Departure Facility and nearby railhead, allow the 3rd Infantry Division from nearby Fort Stewart to efficiently deploy Soldiers and cargo worldwide.

2.3 Site Setting and Hydrogeology

HAAF is in a coastal plain physiographic setting. The installation is heavily wooded with numerous surface water drainages and creeks. HAAF is bounded on the west by the Little Ogeechee River, which receives surface water drainage from the site. HAA-01, HAA-13, HAA-15, and HAA-17 surround the airfield runways, which are the topographic high of the facility. The runways were built on the remnants of a relict

beach ridge, the Pamlico Terrace, with current elevations ranging from 20 to 40 ft above mean sea level.

The hydrogeology in the vicinity and at HAAF consists of two aquifers, the Floridan and Surficial, separated by a thick confining unit, the Hawthorne Group. The Floridan aquifer is a regionally extensive aquifer that is approximately 800 ft thick in the area of the site and is the primary water supply in the area. It is comprised primarily of Oligocene-age and Eocene-age porous limestones. The uppermost aquifer system is the surficial aquifer at the site consisting of a sequence of near-shore to shoreface (barrier island) sediments consisting mainly of sands with interbeds of clays and silts increasing at depth with thicknesses of 40 to 100 ft. Separating these two aquifer systems are continuous clay units of the Hawthorne Group that are over 100 ft thick and underlain by two continuous clay units separating this aquifer from the Floridan, acting as a major confining unit. A deep test well at HAAF (36Q397) shows that interbedded clay units extend from approximately 60 to 300 ft below ground surface (bgs) (US Geological Survey [USGS], 2012). These clays are significant and have not allowed vertical migration of constituents to the Floridan aquifer. Constituents to date have migrated vertically and horizontally through the more permeable sands at shallow depths of the surficial aquifer and have not been encountered deeper and are not expected to migrate into the confining units.

2.4 Types and Sources of Contaminants

The types and sources of contaminants for the sites addressed in this QAPP are as follows:

- HAA-01 (Fire Training Site): Petroleum hydrocarbons from fire training activities and chlorinated solvents from an unknown source.
- HAA-13 (Pump House #1, Releases #1 and #2): Petroleum hydrocarbons from historical fueling activities.
- HAA-15 (MCA Barracks Site): Petroleum hydrocarbons and chlorinated solvents in groundwater from Hanger T-811 area and the former industrial waste treatment plant/washrack area; lead in surface soil in the Old Hospital Area from an unknown source.
- HAA-17 (TCE Groundwater Contamination): Petroleum hydrocarbons and chlorinated solvents in groundwater possibly from historical fueling activities (UST 25/26), cleaning/degreasing of vehicles and weapons, and textile dry cleaning.

2.5 Corrective Action Chronology

This section provides a brief summary of corrective actions completed at the sites addressed in this QAPP. Additional information for each site is provided in Section 4.

2.5.1 HAA-01 (Fire Training Site)

Environmental assessment activities began at HAA-01 in 1987 and various corrective actions have been implemented to address contaminants in soil and groundwater. Completed remedial actions include removal of former fire training area (FTA) components, excavation of soil, and free product removal.

Between November 1997 and March 1998, soil remediation activities were performed at the former FTA. Soils identified at concentrations exceeding screening standards were targeted for removal. Remedial activities included the removal of the former FTA components including the simulated aircraft structure, aboveground storage tanks (ASTs), underground transmission lines, fire training pad, 9,430 tons of soil, 233 tons of concrete debris, and 81,906 gallons of wastewater.

Free product removal activities were initiated in February 1999 and were performed using a belt skimmer system. No product was detected in surrounding monitor wells during subsequent 1999 or 2000 gauging activities.

An Interim Removal Action (IRA) was conducted in 2003 to address free product and contaminated soil in the vicinity of HMW-7. The belt skimmer system was deactivated and removed during the IRA activities. Monitor well HMW-7 and the immediate surrounding area were excavated and removed for off-site disposal.

In accordance with the recommendations provided in the Addendum to the Compliance Status Report (SAIC 2005), semi-annual (January and July) groundwater monitoring activities were initiated at the former FTA and Departure/Arrival Airfield Control Group (DAACG) areas in July 2004 and continued on a semi-annual basis through January 2008. A summary of this semi-annual groundwater monitoring data is presented in the *Compliance Status Report, Revision 1 HAA-01 (Former Fire Training Area and DAACG Chlorinated Solvents Area)* (ARCADIS 2012).

Additional soil and groundwater investigations were completed at HAA-01 between November 2009 and January 2010 to further delineate the extent of soil and groundwater impacts. November 2009 investigation activities included the installation of one monitor well (HA01-MW-17) and five soil borings at the former FTA, and eight

monitor well borings at the DAACG Chlorinated Solvents Area. December 2009 groundwater investigation activities included the installation and sampling of 12 new monitor wells to further delineate the extent of groundwater impacts. In February 2012, a deep monitor well, HA01-MW-07D was installed at the request of the GAEPD in order to provide additional vertical delineation in the vicinity of existing monitor well COE-MW-07.

The investigation results indicated low-level impacts to soil, surface water, and sediment and higher-level impacts to shallow groundwater. The primary groundwater COCs identified were benzene and naphthalene in the FTA and aldrin, benzene, cis-1,2-dichloroethene, trans-1,2-dichloroethene and vinyl chloride in the DAACG area. A summary of data collected during these investigations is presented in the CSR Revision 1 (ARCADIS 2012).

Future planned activities at HAA-01 are presented in Section 2.6.

2.5.2 HAA-13 (Pump House #1, Release #1)

Environmental assessment activities began at HAA-13 in 1995 and various corrective actions have been implemented to address free product and contaminants in groundwater. Completed remedial actions include UST removal and closure in place of underground piping and a defueling tank, free-product recovery via absorbent socks, vacuum extraction, and enhanced fluid recovery, and injection of calcium peroxide (CaP) to enhance aerobic biodegradation processes in groundwater. Corrective actions at the Release #1 site are being implemented in accordance with the 2009 Revised Corrective Action Plan (CAP) – Part B Addendum #1(ARCADIS 2009a). Most recently, in 2012, calcium peroxide was injected into the most impacted area of the site. Semi-annual groundwater sampling is currently performed to monitor the progress of natural and enhanced attenuation. Future planned activities at Pump House #1, Release #1 are presented in Section 2.6.

2.5.3 HAA-13 (Pump House #1, Release #2)

Environmental assessment activities began at HAA-13 in 1995 and various corrective actions have been implemented to address free product and contaminants in groundwater and surface water. Completed remedial actions include those presented above for Release #1 plus injection of oxygen-releasing material, injection of sodium persulfate, and construction of a CaP barrier to mitigate impacts to surface water in a canal south of the site. Most recently, in May 2014, sodium persulfate was injected into 10 injection wells for source area treatment. In June 2014, additional CaP was added

to replenish and maintain the barrier via trenching to the target interval and mixing the CaP with the soil. This method allowed for the application of more CaP and eliminated soil requiring disposal while providing the same in-situ reactive barrier. Corrective actions at the Release #2 site are being implemented in accordance with a 2009 15th Semi-Annual Monitoring Report with Addendum #1 to Revised CAP – Part B (ARCADIS 2009b). Quarterly groundwater and surface water sampling is being performed to monitor performance of the remedial actions. Future planned activities at Pump House #1, Release # 2 are presented in Section 2.6.

2.5.4 HAA-15 (MCA Barracks Site)

Environmental assessment activities began at HAA-15 in 1996 and various corrective actions have been implemented to address contaminants in soil and groundwater. Completed remedial actions include cleaning and partial removal of a grease trap connected to former Hangar T-811.

An enhanced reductive dehalogenation (ERD) pilot study was conducted to evaluate the optimal substrate dosing, spacing of injection wells and the necessity for other aquifer amendments to remediate the volatile organic compounds (VOCs) in groundwater. Pilot study injection activities were performed in February, August and December 2006. Pilot study monitoring activities were conducted from February 2006 through February 2007. A bench-scale test was initiated in December 2006 to provide additional data on alternatives for the ERD remedy. (HydroGeoLogic, Inc. [HGL] 2007)

A membrane interface probe (MIP) investigation was conducted in November 2009 within areas potentially impacted with chlorinated VOCs. In December 2009, using data collected during the MIP investigation, a total of 31 samples were collected from 11 soil boring locations to further delineate the source. Three additional soil boring locations were installed in the Old Hospital Area to collect samples for further delineation of lead impacts. A summary of data collected during this investigation is presented in the *Compliance Status Report, Revision 1 HAA-15 (MCA Barracks Site)* (ARCADIS 2011).

In 2010 and 2011, over 25 monitor wells were installed and sampled in order to further characterize the horizontal and vertical extent of impacts in groundwater. A summary of data collected during this investigation is presented in the *Compliance Status Report, Revision 1 HAA-15 (MCA Barracks Site)* (ARCADIS 2011).

The investigations identified two potential trichloroethylene (TCE) source areas at HAA-15. The primary source originates near the Hangar T-811 area where TCE was used as a cleaner and solvent. TCE contaminated soil was detected during the

removal of the grease trap associated with T-811. The grease trap was used to dispose of spent solvent that was then discharged to the sewer conveyance lines running northward from Hangar T-811 and along Lightning Drive. No source mass was detected in the vadose zone near the grease trap or sewer lines. Extensive investigation near Hanger T-811 and the sewer lines successfully delineated the impacts to groundwater with the highest groundwater concentrations detected downgradient of hanger T-811. Any historical impacts in soil most likely have dissipated through the discharge of water from the sewer lines and subsequent dissolution from soils and/or natural attenuation following the termination of the cleaning and maintenance operations in Hangar T-811 that resulted in the TCE release.

A second potential TCE source area was identified near the aircraft wash racks and former Industrial Waste Treatment Plant (IWTP) adjacent to Building 850, southeast of the Hangar T-811. In this area, TCE was detected in groundwater in the deep zone of the upper aquifer at one location. The TCE concentration [2.8 milligram per liter (mg/L)] was much lower than the impacts detected near Hangar T-811. Concentrations indicative of source mass were not detected in unsaturated soil in the area or in the shallow zone of the upper aquifer.

Based on the available data, the TCE mass is located predominantly in the deeper zone of the upper aquifer from 35 to 50 ft bgs. Significantly lower concentrations (one to two orders of magnitude) were detected in the shallow zone of the upper aquifer.

Vertical delineation in the source area indicated the impacts are predominantly observed within the interbedded sand and clay between 35 and 50 ft bgs. The interbedded sand and clay in the deeper interval of the upper aquifer exhibit increasing percentages of the clays of the upper Hawthorne confining unit with depth effectively prevented any significant vertical migration beyond 50 ft bgs. The two potable wells in the area have open intervals below the Hawthorne confining unit in the upper Floridan Aquifer (259 to 504 ft bgs and 260 to 555 ft bgs) and are not at risk from the impacts at HAA-15.

A tracer study was implemented from September 2011 through February 2012. The tracer study in the source area was intended to support design and implementation of the proposed ERD in-situ bioremediation system. Future planned activities at HAA-15 are presented in Section 2.6.

2.5.5 HAA-17 (TCE Groundwater Contamination)

Environmental assessment activities began at HAA-17 in 1998 and various corrective actions have been implemented to address contaminants in soil and groundwater.

Completed remedial actions include underground storage tank (UST) excavation and removal, and excavation in an area having known free product based on persistent detections in monitoring wells. The tank excavation and removal activities were performed in April 2006. Prior to backfilling activities, an oxygen release compound was placed in the bottom of the excavation to enhance aerobic degradation of benzene, toluene, ethylbenzene, and xylene (BTEX) compounds.

An IRA was subsequently implemented to remove the contaminated soil/free product around wells AF-07 and AF-12. The IRA consisted of excavating an area around each well to a depth of 9.5 ft. Subsequent sampling and monitoring indicated compliance with CAP – Part B closure criteria and a no further action required status was granted by the GAEPD USTMP in a letter dated August 19, 2008.

Recent investigations at HAA-17 between 2009 and 2012 include slug tests at seven monitor well locations to determine hydraulic conductivities in the shallow and deep portions of the upper aquifer, further characterization of the vertical and horizontal extent of VOC contamination in soil and groundwater in suspected source areas around the former UST 25/26 area using MIP technology, soil sampling, and temporary groundwater sampling points, and the installation of 19 monitoring wells to further delineate the extent of impacted groundwater. A summary of data collected during this investigation is presented in the *Compliance Status Report, Revision 1 HAA-17 – Installation-Wide Groundwater including TCE Groundwater Contamination* (ARCADIS 2012).

Based on the extensive investigations conducted at HAA-17, three main areas of groundwater contamination were found, the former UST 25/26 area, the purge facility area, and the former drycleaner area. The highest TCE impacts were reported in deep groundwater (30 to 40 foot interval) in the former UST 25/26 area with minor impacts reported around the purge facility and former dry cleaner area. Petroleum impacts and low-level VOCs were also reported in shallow groundwater (2.5 to 12.5 foot interval) in the UST 25/26 area. Although diffuse, the TCE source appears centered in the area of historic soil borings AF-52 and AF-53 located between former USTs 25 and 26 and Building 1345. Future planned activities at HAA-17 are presented in Section 2.6.

2.6 Project Objectives and Technical Approach

2.6.1 HAA-01, HAA-15, and HAA-17

Extensive investigations have been completed at HAA-01, HAA-15, and HAA-17 to define the extent of impacts. The approach for these sites includes completion of data gap investigations to finalize the Remedial Investigation (RI) and Feasibility Study (FS) Reports and implementation of final remedies for affected media following the CERCLA Process.

The majority of the data collected as part of the historical investigations at HAA-01, HAA-15, and HAA-17 was collected in 2010 or earlier. Therefore, representative environmental samples will be collected to confirm current conditions and additional data will be collected as needed to complete data gap investigations. A Proposed Supplemental Investigation work plan detailing the investigation scope of work was submitted on June 17, 2014 and approved by GAEPD in a letter dated July 30, 2014.

Additionally, a vapor intrusion evaluation will be completed in accordance with USEPA guidelines. Initial vapor intrusion modeling will be completed to evaluate the potential for vapor intrusion at each site. If a potential risk is identified, soil gas and/or sub-slab samples will be collected to further evaluate the potential risk.

Finally, human health and ecological cumulative risk assessments will be completed in accordance with CERCLA requirements. The risk assessments will consider all sources, pathways, and receptors based on the approved conceptual site model (CSM) in the respective study areas.

Existing data and the data collected during the data gap investigations, vapor intrusion evaluations, and risk assessments will be used to prepare separate CERCLA RI/FS reports for each site. The RI/FS reports will present the RI data and the development, screening, and detailed evaluation of remedial action alternatives

Following approval of the RI/FS reports, a combined Proposed Plan (PP) will be prepared to present to the public the preferred alternatives for HAA-01, HAA-15, and HAA-17. A combined public meeting along with 30-day public comment period will be held in accordance with CERCLA requirements. Following approval of the PP, a combined Record of Design (ROD) will be prepared to document the selected remedies for HAA-01, HAA-15, and HAA-17. The ROD will include a responsiveness summary to address written and verbal comments from the public or other

stakeholders. These documents will be prepared consistent with USEPA guidance and in close coordination with USAEC legal and GAEPD representatives.

2.6.2 HAA-13 Pump House #1

Site HAA-13 is regulated under the USTMP. The approach for this site includes completion of ongoing remedial actions for groundwater and surface water as detailed in the following sections for Releases #1 and #2.

2.6.2.1 Release #1

The current approach for the HAA-13 Pump House #1 Release #1 area includes monitored natural attenuation (MNA) to address residual benzene impacts that currently exceed the Alternate Concentration Limit (ACL). As of the April 2014 sampling event, two monitoring wells (D-MW-37 and P1R1-MW-02) exceeded the ACL for benzene. The extent of benzene is currently delineated, does not represent a risk to receptors under the current site conditions, and is adequately managed by the ongoing MNA program.

2.6.2.2 Release #2

Ongoing persulfate injections have resulted in hydrocarbon destruction via both direct oxidation and sulfate-mediated (generated via persulfate consumption) anaerobic biodegradation. The current approach for the HAA-13 Pump House #1 Release #2 area includes optimization of the current remedy to further enhance treatment of dissolved-phase hydrocarbons (specifically benzene) as they migrate along the primary plume path. Routine groundwater monitoring will be continued as part of the approved CAP to ensure concentrations continue to degrade.

3. Project Management

3.1 Project Personnel and Responsibilities

This section provides a description of the PIKA-ARCADIS JV organizational structure of personnel involved with this project. The lines of authority are defined and key personnel identified for various activities of the project. The Project Manager will communicate with the client and regulatory agencies and oversee project execution. The Site Managers will implement project tasks and coordinate with the technical personnel. The project organization including PIKA-ARCADIS JV, USAEC, HAAF, GAEPD personnel is illustrated in Figure A-2. Table A-1 presents contact and QAPP distribution information for key personnel.

PIKA-ARCADIS JV, Project Manager

Ms. Shelley Gibbons. The PIKA-ARCADIS JV Project Manager is responsible for the overall implementation of the project. The Project Manager is responsible for allocating resources to assure successful execution and completion of the scope of work (SOW). Other duties, as required, may include:

- Approving project-specific procedures and internally prepared plans, drawings, and reports;
- Ensuring technical, schedule, and budget requirements are met;
- Coordinating manpower and other necessary resources with PIKA-ARCADIS JV Site Managers and technical personnel;
- Reviewing project progress;
- Reviewing all final documents, plans, and drawings; and
- Coordinating document delivery and attaining project milestones.

PIKA-ARCADIS JV, Site Managers

Ms. Holly Nelson and Mr. Scott Bostian, P.E. The PIKA-ARCADIS JV Site Managers are principally responsible for overseeing day-to-day of task performance including all technical and administrative operations. Other duties required may include:

- Preparing the work plans;

- Selecting and monitoring technical staff;
- Assigning duties to the project staff and orienting the staff to the requirements of the project;
- Coordinating and scheduling field activity resources;
- Performing assessment and oversight duties as described in the project management plan, Sampling and Analysis Plan (SAP), and QAPP;
- Reviewing and approving all final reports and other work products;
- Monitoring staff and subcontractor progress; and
- Distributing the QAPP to the PIKA-ARCADIS JV technical staff.
- Communicating any deviations from the SAP, QAPP, or work plans and the need for corrective actions to the Project Manager and the Quality Assurance Officer (QAO).

PIKA-ARCADIS JV, Quality Assurance Officer

Mr. Richard Murphy, PhD. The PIKA-ARCADIS JV QAO is responsible for oversight of all QA/QC activities. He will remain independent of day-to-day direct project involvement, but will have the responsibility for ensuring that all project and task-specific QA/QC requirements are met. He will have direct access to corporate staff, as necessary, to resolve any QA/QC problems, disputes, or deficiencies. The QA Officer's duties include:

- Reviewing and approving the Site-Wide QAPP and site-specific work plans;
- Reviewing and approving substantive changes to the QAPP, SAP, and work plans;
- Reviewing any new work orders with the Project Manager to determine if the QAPP requires modification;
- Providing external review of field and analytical activities by performance of assessment and oversight duties as described in the Quality Control Plan (QCP); and

- Conducting or delegating responsibility for field audits in conjunction with the corporate QA office and maintaining written records of those audits.
- Working with the Site Manager and Project Chemist, as needed, to evaluate necessary corrective actions.

PIKA-ARCADIS JV, Health and Safety Manager

Mr. Tom Burgess, CSP. The PIKA-ARCADIS JV Health and Safety Manager reviews and internally approves the Health and Safety Plan (HASP) that will be designed to the specific needs and operations associated with this project. In consultation with the Project Manager, the Health and Safety Manager will ensure that an adequate level of personal protection exists for anticipated potential hazards for field personnel. The Health and Safety Manager will identify the Field Health and Safety Officer (FHSO) for each field operation. On-site health and safety will be the responsibility of the FHSO. The FHSO will work in coordination with the Project Manager and the project Health and Safety Manager to ensure that all activities are conducted safely and in accordance with the HASP as well as facility requirements.

PIKA-ARCADIS JV, Project Chemist

Ms. Rachelle Borne. The Project Chemist is responsible for laboratory selection and oversight, data validation and verification, and hard copy and electronic analytical data oversight. The Project Chemist's specific duties include:

- Developing the Site-Wide QAPP and QA aspects of site-specific work plans;
- Providing external review of analytical activities by performance of assessment and oversight duties;
- Coordinating with the Project Manager, Site Managers, and laboratory management to ensure that QA objectives appropriate to the project are set and that laboratory and field personnel are aware of these objectives;
- Recommending, implementing, and/or reviewing with the Project Manager and/or the QAO corrective actions taken in the event of QA/QC failures in the laboratory or field;
- Reporting nonconformance with either QC criteria or QA objectives (including an assessment of the impact on data quality or work assignment objectives) to the Site Manager and/or Project Manager; and

- Assisting with preparation of reports summarizing data quality.

Technical Staff

The technical staff for this program will be drawn from a pool of technical resources within PIKA-ARCADIS JV. The technical staff will implement project and site tasks, analyze data, and prepare reports/support materials. All technical personnel assigned will be experienced professionals who possess the degree of specialization and technical competence required to perform the required work effectively and efficiently. All technical staff will be familiar with the HASP and all relevant Work Plans, SOPs, and policies applicable to the field work performed.

Laboratories

Independent laboratories providing analytical services will be chosen as appropriate for the various project requirements including routine monitoring, confirmation sampling, remedial system monitoring, air analyses, and pilot/benchscale studies. Geotechnical laboratories may be selected based on project requirements and will be identified in the site-specific work plans. Selection criteria for geotechnical laboratories will be based on previous performance on PIKA-ARCADIS JV projects or satisfactory recommendations. Analytical chemistry laboratories shall be accredited under the National Environmental Laboratory Accreditation Program (NELAP) and in accordance with Georgia requirements for the project analytical parameters for which accreditation is available through the primary accrediting state. The laboratory QA programs will be reviewed by the PIKA-ARCADIS JV Project Chemist, as appropriate. The laboratory will assign an experienced Project Manager to coordinate analytical support for field operations with the PIKA-ARCADIS JV Field Operations Leader and Project Chemist.

The analytical chemistry laboratories will provide services under a specified SOW and contractual agreement with PIKA-ARCADIS JV. This QAPP incorporates by reference the laboratory, reporting and detection limits, and quality control limits. SOPs will be evaluated by the project chemist to ensure that method performance is acceptable. Appropriate data will be uploaded to the electronic project database for use by the PIKA-ARCADIS JV Project Manager and Site Managers.

The laboratory staff will include a qualified QA Manager, who reports directly to laboratory management independently of the technical operations of the laboratory, to oversee technical adherence to the laboratory QA programs and this QAPP.

The specific duties of the laboratory project manager and QA Manager include:

- Reviewing the QAPP and other project requirements to verify that analytical operations will meet project requirements as defined in the project documents;
- Documenting and implementing project QA/QC requirements in the laboratory and reviewing analytical data (10 percent for the QA Manager) to verify that the requirements were met;
- Reviewing receipt of all sample shipments and notifying the Project Chemist of any discrepancies within 1 day of receipt;
- Conducting internal laboratory audits to assess implementation of the laboratory Quality Assurance Manual (QAM) and procedures and providing written records of those audits;
- Rapidly notifying the Project Chemist regarding laboratory nonconformance with the QAPP or analytical QA/QC problems affecting project samples; and
- Coordinating with the project and laboratory management to implement corrective actions as required by the QAPP and internal laboratory QAM.

The principal contract laboratory is Shealy Environmental Inc. (Shealy). Shealy's QAM will be reviewed and retained by the PIKA-ARCADIS JV Project Chemist. If additional laboratory services are needed during execution of the project, the QAMs for these laboratories will be incorporated in this QAPP by reference once the laboratory subcontract is executed.

Other Subcontractors

Other subcontractors will provide services under the direct supervision or direction of the PIKA-ARCADIS JV Project Manager or Site Managers or appropriate designated staff. The drilling, surveying, geotechnical laboratory, and other subcontractors are responsible for performance in accordance with the individual subcontracts and applicable portions of the QAPP and QCP as defined in each subcontract package. Subcontractors are responsible for rapidly notifying the Site Manager regarding nonconformance with the QAPP or QA/QC problems encountered or observed. Subcontractors must coordinate with the Site Managers to implement corrective actions.

4. Problem Definition/Background

The following subsections are organized by area. Each subsection provides a brief summary of site description and history, site hydrogeology, and potential human and ecological receptors. All potential exposure pathways to soil, sediment, surface water and groundwater media applicable to each site are discussed and complete exposure pathways are summarized. For soil, exposure to human receptors will be considered for both surface soil (0-1 ft bgs) and combined surface and subsurface soil (defined as 0 to the groundwater table). For ecological receptors, exposure to soil (0-3 ft bgs) will be considered to account for burrowing receptors and plant roots. A more detailed description of the ecological habitats at the site will be provided in the RI/FS together with photographic evidence as well as a detailed discussion of ecological assessment and measurement endpoints.

4.1 HAA-01 Former Fire Training Area (FTA) and the Departure/Arrival Airfield Control Group (DAACG)

4.1.1 Site Description and History

HAA-01 consists of the FTA and the Departure/Arrival Airfield Control Group (DAACG) in the northwestern portion of the HAAF (Figure A-3). The site is west of the flight line and approximately 800 ft northwest of the control tower. The former FTA consisted of a steel structure utilized as a mock aircraft that was on a gravel covered concrete fire training pad, bermed on all sides. Two ASTs, a 17,000 gallon fuel AST and a 1,100 gallon fuel and solvent contaminated water AST, were also located at the site. Releases of fuels from components of the fuel application system and from the containment system were apparently responsible for the contamination associated with the FTA. Fire training activities were discontinued at the site in 1991, and all components of the FTA, along with contaminated soils, were removed in 1998 as part of soil remediation activities. The DAACG was identified during the investigation of the former FTA.

Topography at the site gently slopes toward the Springfield Canal that is located 3,600 ft to the west. The principal surface water body receiving drainage from the former FTA are the drainage ditches to the north and south which flow to the west toward Springfield Canal located 3,600 ft to the west. The ditches originate on the former FTA site and are fed by underground culverts from the flightline area. The ditches assist in draining the northern and southern end of the runways which are located just across Lightning Road. These drainage ditches have vegetation and in some locations concrete lining both sides of the banks to prevent erosion. Flow in the ditches is

governed by precipitation runoff. The ditches remain dry during periods. The Springfield Canal flows southwest before emptying into the Little Ogeechee River, 5.5 miles downstream of HAAF.

Multiple phases of investigation were conducted at HAA-01 between January 1997 and February 2012 to delineate impacts to soil, groundwater, surface water, and sediment. The investigations successfully delineated the horizontal and vertical extent of impacts at HAA-01. The sample analysis results indicated low-level impacts to soil, surface water, and sediment and higher-level impacts detected in shallow groundwater. The primary groundwater constituents of concern are benzene and naphthalene in the FTA and aldrin, benzene, cis-1,2-dichloroethene, trans-1,2-dichloroethene and vinyl chloride in the DAACG area.

A data gap investigation is planned to evaluate current groundwater, sediment, and surface water conditions. The results of the data gap investigation will be combined with the existing data in a RI/FS report.

4.1.2 Hydrogeology

The hydrology at HAA-01 has been characterized by groundwater monitor wells installed across the site at two different intervals (the shallow and deep surficial aquifer). The shallow surficial aquifer monitor wells range from a total depth of 11.5 to 20.5 ft bgs, while the deep surficial aquifer monitor wells have total depths ranging from 48 to 65 ft bgs. Typically, groundwater flow in the shallow and deep surficial aquifer direction is northwest across the DAACG Area with a horizontal groundwater gradient of approximately 0.017 feet per foot (ft/ft). At the former FTA, the groundwater flow direction is also to the northwest with an average horizontal groundwater gradient of approximately 0.042 ft/ft.

The vertical groundwater gradient has been historically measured at the site using three well clusters (HMW-1/HMW-2, HMW-3/HMW-4, and HMW-5/HMW-6). Calculated vertical gradients, developed from December 2009 well gauging data, range from 0.036 ft/ft to 0.075 ft/ft in a downward direction.

4.1.3 Potential Sources

Investigations have concluded that previous fire training activities are the most likely source of BTEX in the soil and groundwater. The source of constituents in groundwater in the DAACG area has not been identified. Historic activities at HAA-01 have resulted in impacts to the soil and groundwater. The presence of constituents in these media

can result in the movement of constituents from these secondary sources to additional environmental media. The constituents detected in soil and groundwater belong to different classes of compounds and their migration pathways may differ. For example, the volatile constituents may migrate in the air (ambient, subsurface soil) following volatilization from either soil or groundwater. Constituents that are not considered volatile may migrate through the subsurface to the groundwater or remain in the surficial soil depending on their properties.

4.1.4 Potential Human Receptors

Like many military bases, access to the site is restricted. Thus, trespassers are not expected at the site under current conditions. Since HAA-01 has been unoccupied since 1991, portions of the site are overgrown. Workers charged with periodically mowing or using the bush-hog to clear the site are the most likely potential human receptors. Similarly, this site has been used for non-residential uses, and it is unlikely that the site will be used for permanent, residential housing. HAA has a master plan (U.S. Army 2006) that indicates that the nearest family housing is over one mile to the southeast of this site. In general, the GAEPD requires evaluation of the residential exposure pathway. Therefore, the human health risk assessment will consider potential exposures of hypothetical future residents and site workers, and potentially construction workers.

The surface water features are unlikely to be accessed from HAA-01. The ditch banks are steeply sloped and heavily vegetated, thus precluding contact with surface water and sediments. Nonetheless, it is possible that individuals could access the surface water and sediment and potential exposure to individuals will be considered in the risk assessment. Three water supply wells were identified within 1 mile of the site during completion of a water well survey (USGS, Georgia District, 2000). Water use from these wells is identified as commercial, agricultural, or military usage. Groundwater at the site is not used as a potable water supply. Nonetheless, potential use of the groundwater as a potable water supply will be considered in the risk assessment.

4.1.5 Potential Human Exposure Pathways

An exposure pathway is a mechanism by which receptors may come into contact with site-related constituents. The USEPA (1989) describes a complete exposure pathway in terms of four components:

1. A source and mechanism of constituent release;
2. A retention or transport medium;

3. A point of contact between the human receptor and the medium; and
4. A route of exposure for the potential human receptor at the contact point.

There must be a complete exposure pathway from the source of constituents in the environment (i.e., from soil, air, groundwater) to human receptors in order for constituent intake to occur. The exposure pathways and associated exposure medium identified for the receptors at the site are described below per receptor and included in Figure A-4.

- Hypothetical future adult and child residents potentially exposed to surface and subsurface soil through direct contact, groundwater used as a potable water supply, and if appropriate, inhalation of vapors migrating to indoor air.
- Hypothetical future commercial/industrial workers potentially exposed to surface and subsurface soil through direct contact, ingestion of groundwater used as a potable water supply, and if appropriate, inhalation of vapors migrating to indoor air.
- Hypothetical future construction/utility workers potentially contacting soil and shallow groundwater.
- Adolescent trespassers contacting soil, surface water, and sediments.

4.1.6 Potentially Exposed Ecological Receptors

Surface soil is the primary environmental medium at the Site with which contact by ecological receptors is possible. There are no seeps of groundwater to soil that could serve as foraging grounds for ecological receptors. Furthermore, the drainage ditches only temporarily hold surface water and, for the most part, they are covered with terrestrial grass. The limited portions of the drainage ditches that do hold water during high rain events are lined with concrete and/or asphalt and do not provide suitable habitat for aquatic life (i.e., fish and benthic invertebrates). The lack of aquatic life in the drainage ditches prevents any upper-trophic level birds or mammals from foraging in the ditches. As a result, groundwater, surface water, and sediment are not considered to be direct and complete exposure pathways and are therefore not identified as media of concern for ecological receptors at the site.

The principal habitat types present at the former FTA are managed grassland and neighboring forestland. Managed grasslands are found at the former FTA and extend north and south to the drainage ditch in either direction. Managed grasslands are typified by planted grass of one or more species maintained by mowing, application of fertilizers, etc. Common fauna includes earthworms and other soil-dwelling

invertebrates, birds such as robins, and mammals, such as shrews, rabbits, and raccoons. The former FTA, beyond the drainage ditches and within the isolated tree island between the northern and southern ditches, consists mainly of mixed hardwood bottomland forest with a few interspersed pines. Potentially exposed receptors are designated based on the available habitat associated with the Site. Potentially exposed receptors include terrestrial wildlife (i.e., mammals and birds), soil invertebrates, and terrestrial plants.

As part of the identification of potentially exposed receptors, it is necessary to identify protected species that may be exposed to site constituents. The listings of threatened and endangered as well as tracked, rare, and unusual species were obtained from the Georgia Department of Natural Resources (GADNR, 2010) and the US Fish and Wildlife Service (USFW, 2010) online databases for Chatham County. No threatened or endangered species were identified at HAA-01, and the habitat present at the Site was found not to be suitable to support threatened or endangered species.

4.1.7 Potentially Complete Ecological Exposure Pathways

A complete exposure pathway is "one in which the chemical can be traced or expected to travel from the source to a receptor that can be affected by the chemicals" (USEPA 2001). Therefore, a constituent, its release and migration from the source, a receptor, and the mechanisms of toxicity of that constituent must be demonstrated before a complete exposure pathway can be identified. The table below summarizes the potential exposure routes for the site, which is also illustrated in the CSM (Figure A-4).

Ecological Community	Possible Exposure Routes
Terrestrial wildlife (i.e., birds and mammals)	Incidental ingestion of surface soil Direct contact of surface soil Ingestion of prey tissue
Terrestrial soil invertebrates (i.e., earthworms)	Direct contact of surface soil Ingestion of surface soil
Terrestrial plants	Direct contact of surface soil

4.2 HAA-13 – Pumphouse #1

4.2.1 Site Description and History

Former Pump house #1 (HAA-13) was an aviation-fuel island located along the east-west taxiway of HAAF used from about 1953 until the early 1970s. It consisted of ten

25,000-gallon USTs and a 50,000-gallon underground defueling tank. Between 1995 and 1998, the ten 25,000-gallon USTs and the pump house structure were removed. The 50,000-gallon defueling tank was closed in-place. The piping from the boundary of the pump house facility to the bulk fuel farm was also drained, pigged, and grouted in-place.

Two distinct and separate plumes are located within the vicinity of the former Pumphouse #1 site. These plumes are referred to as Release #1 (Figure A-5) and Release #2 (Figure A-6). During the CAP–Part B investigation activities, the horizontal and vertical extent of petroleum-related contamination in soil and groundwater was determined for both areas of contamination. The corrective actions at Release #1 and Release #2 are being addressed separately. The following sections provide a description of Release #1 and Release #2.

4.2.1.1 Pump House #1 Release #1

Release #1 is an area of soil and groundwater contamination located near the DAACG facility that is in the vicinity of former Fuel Pits 1A and 1B, located approximately 900 ft west of former Building 8060 (i.e., Pumphouse #1). A release from Former Fuel Pit 1A was apparently responsible for the petroleum hydrocarbon contamination associated with Release #1. The recommended remedial strategy for groundwater petroleum-related impacts in the 2000 CAP–Part B was free product removal followed by MNA. The first phase of the corrective action is substantially complete, as free product has not been detected at a measurable thickness in site monitor wells since December 2006.

The second phase of corrective action is remediation of benzene in groundwater to below the GAEPD approved alternate concentration limit (ACL) of 285 micrograms per liter (µg/L). To reduce the estimated timeframe for groundwater to reach ACLs, an active remedy was recommended in the 2009 Revised CAP – Part B and the 2009 Revised CAP – Part B Addendum #1. The remedy consists of CaP injections to increase oxygen concentrations in the aquifer and enhance aerobic biodegradation of the residual BTEX impacts in groundwater. To date, two CaP injections have been completed.

Benzene concentrations in the site monitor wells are close to the ACL of 285 µg/L and have shown a long-term decreasing trend. The extent of benzene is currently delineated, does not represent a risk to receptors under the current site conditions, and is adequately managed by the ongoing MNA program. Currently, groundwater monitoring is conducted on a semi-annual basis.

4.2.1.2 Pump House #1 Release #2

Release #2 is an area of petroleum-related soil and groundwater contamination located near the former Pumphouse #1 facility and former Fuel Pits 1C and 1D, located approximately 200 ft north of the former Tank Pits. A release from Former Fuel Pit 1C was apparently responsible for the contamination associated with Release #2.

The recommended remedial strategy for groundwater petroleum-related impacts in the 2000 CAP-Part B was free product removal followed by MNA. In May 2006, six injection wells were installed around the Pumphouse #1 Release #2 tank pit area for the injection of oxygen-releasing material (ORM) to enhance the degradation of the BTEX compounds. Injections were conducted from July 2006 through April 2007; however, site contaminant levels were not significantly reduced through the injection of ORM over the 1-year period.

To decrease the remedial timeframe, in-situ chemical oxidation using sodium persulfate was proposed to reduce contaminant mass in the two source areas, designated Area A and Area B. To mitigate impacts to canal surface water downgradient of the petroleum hydrocarbon plume, injection of CaP to serve as a reactive barrier was proposed upgradient of the canal (Area C).

The proposed remedy was approved by GAEPD USTMP on January 28, 2010. To date, five injections of sodium persulfate injections and three injections of CaP have been completed. The most recent CaP “injection” in June 2014 consisted of application of CaP via trenching to the target interval and mixing the CaP with the soil. This method allowed for the application of more CaP and eliminated soil requiring disposal while providing the same in-situ reactive barrier.

As specified in the CAP–Part B Report, corrective action activities will be discontinued when benzene concentrations in groundwater are reduced to below the GAEPD approved ACL of 285 µg/L. Additionally, benzene and chrysene concentrations in soil must be below the approved alternate threshold limits (ATL) of 9.3 and 2.1 milligrams per kilogram (mg/kg), respectively. Chemical oxidation with sodium persulfate has been effective in destroying contaminant mass. However, the residual mass has resulted in a rebound in concentrations and benzene concentrations currently exist above the ACLs. Subsurface soil sampling performed in January 2008 indicated that the benzene concentrations are below the ATL of 9.3 mg/kg. Soil samples were not analyzed for chrysene.

Currently, groundwater monitoring is conducted on a quarterly basis to monitor the reactive barrier treatment performance and to determine when the reactive barrier needs to be replenished.

4.2.2 Hydrogeology

Groundwater encountered at HAA-13 is part of the surficial aquifer system. In April 2014, depth to groundwater at the former Release #1 area ranged between 8.44 and 11.45 ft bgs. In April 2014, depth to groundwater at the former Release #2 area ranged between 4.82 and 8.43 ft bgs. Groundwater in the vicinity of the former Release #1 area flows toward the northwest. Groundwater in the vicinity of the former Release #2 area flows generally to the south, with man-made ditches affecting localized flow.

The average gradient at Release #1 in April 2014 was approximately 0.007 ft/ft as measured from monitor wells P1R1-MW-01 to D-MW-37. Groundwater seepage velocity was previously calculated to be approximately 0.5 feet per day (ft/day) as measured from monitor wells P1R1-MW-01 to D-MW-36.

4.2.3 Potential Receptors and Exposure Pathways

The Former Pumphouse #1 site is located within an active military installation and within an access-controlled fence of an active airfield. The land use at the site is currently military industrial. Installation housing areas are located more than half a mile to the northeast. A man-made drainage ditch is located approximately 300 ft southeast of the former tank pits. The man-made surface water drainage feature eventually empties into Springfield Canal, which flows southwest and joins the Ogeechee River more than 3.8 miles downstream of the site. The drainage ditch is located adjacent to the flight line and aircraft taxiway and access to the area is restricted; thus, the drainage ditch is not used for recreational purposes.

No connection between site contamination and current off-site receptors has been identified. Current on-site receptors have not been identified for the site. Potential future on-site receptors might include industrial workers and military residents.

Potential future on-site industrial receptors may come into direct contact with the site soil contamination during construction or excavation activities. Due to the restricted access to the site, no near-term or on-site receptors are likely to encounter groundwater even though the surficial aquifer discharges to the drainage ditch.

4.3 HAA-15 - MCA Barracks Site

4.3.1 Site Description and History

The MCA Barracks Site (HAA-15) is north of the flight line in the northeastern portion of HAAF (Figure A-7). This area has historically housed and currently houses barracks, hangars, maintenance areas, a heat plant facility, administration buildings, recreation facilities, crash stations, warehouses, guardhouses, former hospital buildings, a Link trainer building, mess halls, officers' quarters, and a theater. The barracks provide housing to transient military personnel during the work week. Family housing is not provided at the site. The site also includes an active air field and green space. The green space on the Site is comprised of a landscaped, maintained area of oak trees and a 10-acre man made storm water pond (Pond 29 /Oglethorpe Lake) located at the western portion of the site which has been designated for recreational uses by the National Recreation Lake Study Commission (1999). The green space at the site provides terrestrial and aquatic habitat for ecological receptors.

Two TCE source areas have been identified at HAA-15. The primary source originates near the Hangar T-811 area where TCE was used as a cleaner and solvent. A second TCE source area was identified near the aircraft wash racks and former Industrial Waste Treatment Plant adjacent to Building 850, southeast of the Hangar T-811. Based on the available data, the TCE mass is located predominantly in the deeper zone of the upper aquifer from 35 to 50 ft bgs. Significantly lower concentrations (one to two orders of magnitude) were detected in the shallow zone of the upper aquifer.

The majority of the chlorinated VOC impacts in groundwater have been delineated. In 2011/2012, membrane interface probe evaluations and injection tracer testing were completed to support evaluation of potential remedial technologies in the FS. A data gap investigation is planned to complete delineation and provide an updated understanding of current plume conditions. The results of the data gap investigation will be combined with the existing data in a RI/FS report.

4.3.2 Hydrogeology

Groundwater at HAA-15 flows towards the northwest away from the runway complex. The 10-acre man-made pond and canals at the site appear to be discharge boundaries for the shallow groundwater. Shallow groundwater flow is generally to the north-northwest. The average shallow zone gradient was calculated to be 0.0085 ft/ft. Deep zone groundwater flow is also generally to the north-northwest at an average gradient calculated to be 0.012. Slug tests conducted during the 2005-2006 investigations

resulted in calculated hydraulic conductivities at HAA-15 varying from 0.76 ft/day to 17 ft/day. Groundwater movement at HAA-15 is likely controlled by sand lenses, which are interbedded within a generally lower hydraulic conductivity aquifer matrix.

The observed depth to groundwater ranges from 2 ft to 10 ft across the site. Groundwater flow within the uppermost aquifer (i.e. to depths of between 40 and 45 ft bgs) exists under unconfined conditions. A persistent clay unit at HAA-15 divides the shallow aquifer system into two zones. Significant downward vertical hydraulic gradients at selected well locations across the Hunter AAF site suggest that areas of the uppermost aquifer system at HAA-15 are composed of two distinct zones of saturation north of the hangars.

4.3.3 Potential Sources

The source of constituents in environmental media at HAA-15 is unknown.

4.3.4 Potential Human Receptors

Military and civilian workers are the most likely receptor since access to the site is restricted. It is unlikely that the site will be used for permanent, residential housing. HAAF has a master plan (U.S. Army 2006) and it indicates that the nearest family housing is one mile to the southeast of this site. Nonetheless, exposure of hypothetical future residents will be evaluated in the human health risk assessment. Volatile organic compounds are present in the groundwater and soil may migrate into buildings at the site. Therefore, the vapor intrusion exposure pathway is a potential exposure pathway.

Trespassers are not expected at the site under current conditions. However, if there are constituents detected in surface water and/or sediments, the potential exposure of adolescent trespassers will be considered in the risk assessment. Groundwater at the site is not used as a potable water supply. The deeper Floridan aquifer is used as the potable water supply, although the wells are hydrogeologically upgradient of the site. Therefore, potable use of groundwater will not be evaluated under current conditions, but will be for a hypothetical future exposure scenario.

In the event that construction occurs at the site, construction workers could contact impacted soil. The depth to water is approximately 8 to 10 ft bgs. Construction workers may contact the groundwater during construction activities.

4.3.5 Potential Human Exposure Pathways

The exposure pathways and associated exposure medium identified for the receptors at the site are described below per receptor and shown in Figure A-8.

- Hypothetical future adult and child residents potentially exposed to surface and subsurface soil through direct contact, groundwater used as a potable water supply, and if appropriate, inhalation of vapors migrating to indoor air.
- Current and hypothetical future commercial/industrial workers potentially exposed to surface and subsurface soil through direct contact, hypothetical future exposure through ingestion of groundwater used as a potable water supply, and if appropriate, inhalation of vapors migrating to indoor air under current and hypothetical conditions.
- Hypothetical future construction/utility workers potentially contacting soil and shallow groundwater.
- Adolescent trespassers or recreator contacting soil, surface water, and sediments.

4.3.6 Potential Ecological Receptors

Environmental media at the site with which contact by ecological receptors is possible include soil, groundwater, surface water, and sediment. Groundwater at the site occurs in the surficial aquifer at depth ranging from 2 to 15 feet bgs and the deeper Floridian aquifer. The surficial aquifer is separated from the Floridian Aquifer by a thick confining unit of clay. Recharge to the surficial aquifer occurs through precipitation on land directly above the aquifer.

Potentially exposed receptors are designated based on the available habitat associated with the site. Potentially exposed receptors include terrestrial wildlife (i.e., mammals, birds, reptiles, and invertebrates), terrestrial plants, and aquatic biota (fish and invertebrates directly exposed to surface water and sediment). The green space on the site is comprised of a landscaped, maintained area of oak trees and a 10-acre man made storm water pond (Pond 29 /Oglethorpe Lake) located at the western portion of the site which has been designated for recreational uses by the National Recreation Lake Study Commission (1999). The green space at the site provides terrestrial and aquatic habitat for ecological receptors.

As part of the identification of potentially exposed receptors, it is necessary to identify protected species that may be exposed to site constituents. The listings of threatened and endangered as well as tracked, rare, and unusual species were obtained from the

GADNR(2010) and the USFW (2010) online databases for Chatham County. No threatened or endangered species were identified at the site, and the habitat present at the site was found not to be suitable to support threatened or endangered species. The site may potentially offer foraging habitat for a wood stork.

4.3.7 Potential Exposure Pathways for Ecological Receptors

A complete exposure pathway is "one in which the chemical can be traced or expected to travel from the source to a receptor that can be affected by the chemicals" (USEPA 2001). Therefore, a constituent, its release and migration from the source, a receptor, and the mechanisms of toxicity of that constituent must be demonstrated before a complete exposure pathway can be identified. The potential ecological receptors are included in the table below and Figure A-9**.**

Organism	Possible Exposure Routes
Terrestrial wildlife	Ingestion, direct contact, and food chain
Terrestrial soil invertebrates (i.e., earthworms)	Ingestion, direct contact
Terrestrial plants	Direct contact with/uptake from soil and groundwater
Benthic or Aquatic Organisms	Ingestion and direct contact with sediment and surface water, and food chain
Aquatic plants	Direct contact with and uptake with surface water

4.4 HAA-17 Problem Definition/Background

4.4.1 Site Description and History

HAA-17 is located in the northeastern portion of HAAF and east of the flight line (Figure A-10). Facilities currently and formerly located in the investigation area are the purge facility, Former USTs 25 and 26, Building 1290, former drycleaner location, and former Strategic Air Command special weapons area. The HAAF purge facility is an active facility where tanker trucks that store and transport petroleum products, mainly JP-8, are cleaned. Former UST 25 stored diesel fuel (25,000 gallons) and former UST 26 stored gasoline (6,000 gallons). Building 1290 serves as an aircraft hangar where

solvents were formerly used as part of degreasing activities. Other facilities previously located in the investigation area include a former dry cleaning facility that was east of Building 1290 and a former weapons cleaning facility that was south of the former dry cleaner.

Based on the extensive investigations conducted at HAA-17, three main areas of groundwater contamination were found, the former UST 25/26 area, the purge facility area, and the former drycleaner area. The highest TCE impacts were reported in deep groundwater (30 to 40 foot interval) in the former UST 25/26 area with minor impacts reported around the purge facility and former dry cleaner area. Petroleum impacts and low-level VOCs were also reported in shallow groundwater (2.5 to 12.5 foot interval) in the UST 25/26 area.

The historic investigations have sufficiently delineated impacts for completion of the RI with some exceptions. A data gap investigation is planned to complete delineation and provide an updated understanding of current plume conditions. The results of the data gap investigation will be combined with the existing data in a RI/FS report.

4.4.2 Hydrogeology

A groundwater divide is evident in both shallow and deep groundwater between Building 1290 and the former purge facility. The flow direction of groundwater in the Building 1290 area is generally westerly toward the taxiways. Groundwater in the shallow and deep zones in the central and eastern portions of the HAA-17 area follows the topographic gradient of the site and flows to the southeast toward the former location of USTs 25 and 26 and the canal. Deep zone groundwater continues to flow east under the drainage canal. Data indicate the drainage ditch is a discharge point for shallow groundwater and surface water levels mimic shallow groundwater conditions. Artesian conditions exist in some wells proximate to the canal.

4.4.3 Potential Sources

USTs 25 and 26 contained petroleum hydrocarbons. Releases from the USTs were investigated and remediated under the GAEPD USTMP (Facility ID No. 9-025008). The referenced release was granted a no further action required status by the GAEPD USTMP in a letter dated August 19, 2008. During investigation activities for former USTs 25 and 26, TCE impacts were identified in groundwater. There are several potential sources identified above for constituents in soil and groundwater.

4.4.4 Potential Human Receptors

HAA-17 is located in the northern portion of HAAF. This portion of HAAF does not include residential housing. Therefore, under the current configuration of HAAF-17, only military and civilian workers would be expected to be present. The site itself is predominantly covered with buildings and paved areas. There are limited areas of bare soil. Thus, direct contact with soil is not expected to occur to an appreciable extent under current conditions. However to evaluate potential exposures under future conditions where the soil may become exposed, several hypothetical future receptors were identified and will be evaluated in the risk assessment.

Like many military bases, access to the site is restricted. Thus, trespassers are not expected at the site under current conditions. Nonetheless, potential exposure of trespassers to soils under hypothetical future conditions when more soil might be uncovered, will be evaluated. Similarly, it is unlikely that the site will be used for permanent, residential housing. The HAAF Master Plan indicates that the nearest family housing is 1 mile to the southeast of this site.

Groundwater at the site is not used as a potable water supply. The deeper Floridan aquifer is used as the potable water supply, although the wells are hydrogeologically upgradient of the site. The wells may also be used for non-potable purposes.

The depth to water is approximately 8 to 10 ft bgs. Construction workers may contact groundwater during construction activities. Additionally, volatile organics present in the groundwater and soil could potentially migrate into buildings at the site.

4.4.5 Potential Human Exposure Pathways

The exposure pathways and associated exposure medium identified for the receptors at the site are described below per receptor and included in Figure A-11.

- Hypothetical future adult and child residents potentially exposed to surface and subsurface soil through direct contact, groundwater used as a potable water supply, and if appropriate, inhalation of vapors migrating to indoor air.
- Current and hypothetical future commercial/industrial workers potentially exposed to surface and subsurface soil through direct contact, hypothetical future exposure through ingestion of groundwater used as a potable water supply, and if appropriate, inhalation of vapors migrating to indoor air under current and hypothetical conditions..

- Hypothetical future construction/utility workers potentially contacting soil and shallow groundwater.
- Current and hypothetical future adolescent trespassers contacting soil.

4.4.6 Potentially Exposed Ecological Receptors

The identification of the categories of receptors most likely to be exposed helps to focus the Screening Level Ecological Risk Assessment. The principal habitat types of the site are managed grassland and neighboring forestland. Managed grasslands are typified by planted grass of one or more species maintained by mowing, application of fertilizers, landscaping, etc. Potentially exposed receptors include terrestrial wildlife (i.e., mammals and birds), soil invertebrates, and terrestrial plants.

As part of the identification of potentially exposed receptors, it is necessary to identify protected species that may be exposed to site constituents. The listings of threatened and endangered as well as tracked, rare, and unusual species were obtained from the GADNR (2010) and the USFW (2010) online databases for Chatham County. No threatened or endangered species were identified at the site, and the habitat present at the site was found not to be suitable to support threatened or endangered species.

4.4.7 Potentially Complete Exposure Pathways for Ecological Receptors

A complete exposure pathway is "one in which the chemical can be traced or expected to travel from the source to a receptor that can be affected by the chemicals" (USEPA 2001). Therefore, a constituent, its release and migration from the source, a receptor, and the mechanisms of toxicity of that constituent must be demonstrated before a complete exposure pathway can be identified. The potential ecological receptors are included in the table below and Figure A-12.

Ecological Community	Possible Exposure Routes
Terrestrial wildlife (i.e., birds and mammals)	Incidental ingestion of surface soil Direct contact of surface soil Ingestion of prey tissue
Terrestrial soil invertebrates (i.e., earthworms)	Direct contact of surface soil Ingestion of surface soil
Terrestrial plants	Direct contact of surface soil

4.5 QAPP Objectives

The field sampling program and field procedures are described in detail in the SAP, and therefore are not repeated in this QAPP. Additional work plans will be prepared as sampling and analytical requirements are defined. Any additional specific QA requirements will be included in specific plans.

The purpose of this QAPP is to provide field, laboratory, and quality assessment personnel with general instructions regarding activities to be performed before, during, and after each sampling effort to ensure generation of usable data. This QAPP contains general and specific details regarding field sampling, laboratory analytical methods, and data management that apply to the Site. The collection and documentation of data will be performed as described in the following sections to ensure the quality of the collected data.

4.6 Data Quality Objectives for Measurement Data

The overall project Data Quality Objectives (DQOs) are presented in Table A-2. Additional analytical performance and data review DQOs include precision, accuracy, representativeness, completeness, and comparability. These criteria represent qualitative and quantitative objectives that ensure the data are generated that are scientifically valid and usable for the intended purpose. As discussed in *USEPA Guidance on Systematic Planning Using the Data Quality Objectives Process; USEPA QA/G-4*, dated February 2006 and *USEPA Requirements for Quality Assurance Project Plans; USEPA QA/G-5*, dated March 2001, the DQOs are dependent on the intended uses of the data and are based on the premise that the ultimate use(s) of a particular data set should dictate the quantity and quality of these data. These DQOs in conjunction with criteria set forth in this QAPP will be used as a guide for data quality assessment by establishing analytical protocols and documentation requirements that will allow the analytical data to be collected, analyzed, and verified/validated in a consistent manner.

4.6.1 Precision, Accuracy, Representativeness, Completeness, and Comparability

The basis for assessing the elements of data quality is discussed in the following subsections. The contract analytical laboratory precision and accuracy QC limits are provided in Attachment A-3.

Precision measures the reproducibility of repetitive measurements. It is strictly defined as the degree of mutual agreement among independent measurements as the result of repeated application of the same process under similar conditions.

Analytical precision is a measurement of the variability associated with duplicate (two) or replicate (more than two) analyses of the same sample in the laboratory and is determined by analysis of laboratory control samples/laboratory control sample duplicate (LCS/LCSD), matrix spikes/matrix spikes duplicate (MS/MSD), laboratory duplicates and field duplicates. If the recoveries of analytes in the LCS are comparable within established control limits, then laboratory precision is within limits. The contract laboratory control limits will be utilized to evaluate analytical precision.

Total precision is a measurement of the variability associated with the entire sampling and analysis process. It is determined by analysis of duplicate or replicate field samples and measures variability introduced by both the laboratory and field operations. Field duplicate samples and matrix duplicate spike samples are analyzed to assess field and analytical precision. Field duplicate samples will be collected at a minimum 5 percent frequency.

Duplicate results are assessed using the relative percent difference (RPD) between duplicate measurements. The formulas for the calculation of precision are provided in Table A-3 as RPD (used for two measurements), average RPD, relative standard deviation (RSD), and pooled RSD (used for more than two measurements). The proposed precision objective for soil and sediment field duplicates is an RPD of 70 percent and the precision objective for groundwater and surface water field duplicates is an RPD of 40 percent for all parameters analyzed.

Accuracy is a statistical measurement of correctness and includes components of random error (variability due to imprecision) and systematic error. It reflects the total error associated with a measurement. A measurement is accurate when the value reported does not differ from the true value or known concentration of the spike or standard. Analytical accuracy is measured by determining the percent recovery (%R) of known target analyses that are spiked into a LCS to a control limit. For organic parameters analyzed by gas chromatography (GC) and gas chromatography /mass spectrometry (GC/MS) surrogate compound recoveries are also used to assess accuracy and method performance for each sample analyzed.

Both accuracy and precision are calculated for preparation or analytical batches, and the associated sample results are interpreted by considering these specific measurements. The formula for the calculation of accuracy is included in Table A-3 as

%R from pure and sample matrices. Laboratory precision and accuracy control limits are provided in Attachment A-3.

Representativeness is achieved through use of the standard field, sampling, and analytical procedures. Representativeness is also determined or influenced by appropriate program design, with consideration of proper sampling locations and collection techniques.

Completeness is calculated for the aggregation of data for each analyte measured for any particular sampling event or other defined set of samples. The number of valid results divided by the number of possible individual analyte results, expressed as a percentage, determines the completeness of the data set. For completeness requirements, valid results are all results not qualified with an "R" flag/reject or unusable data. For any instances of samples that could not be analyzed for any reason (e.g., holding time violations in which re-sampling and analysis were not possible, or samples spilled or broken), the numerator of this calculation becomes the number of valid results minus the number of possible results not reported.

The formula for calculation of completeness is presented, as follows:

$$\% \text{ completeness} = \frac{\text{number of valid results}}{\text{number of possible results}}$$

The completeness objective for sample matrices collected during these investigations will be at least 90 percent.

Comparability is the confidence with which one data set can be compared to another data set. The objective for this aspect of the QA/QC program is to produce data with the greatest possible degree of comparability. The number of matrices that are sampled and the range of field conditions encountered are considered in determining comparability. Comparability is achieved using standard methods for sampling and analysis, reporting data in standard units, and using standard and comprehensive reporting formats. Complete field documentation using standardized data collection forms shall support the assessment of comparability. Historical comparability is achieved through consistent use of methods throughout the project. USEPA approved methods will be utilized for analytical chemistry determinations as available.

4.6.2 Objectives for Laboratory Analyses

The laboratory DQOs include method performance and reporting consistent with criteria presented in the USEPA document entitled "Test Methods for Evaluating Solid Waste-Physical/Chemical Methods," SW-846, Third Edition (as updated), the laboratory QAM and SOPs, this QAPP, and other applicable performance requirements published in USEPA method guidance.

4.6.3 Objectives for Field Measurements

Field measurement DQOs for precision, accuracy, and completeness criteria presented in Table A-4 are consistent with the industry acceptance criteria.

Trip blanks (TBs) will accompany samples to be analyzed for VOCs. Field duplicate samples will be collected at a frequency of 5 percent for each analysis and each sample matrix collected. Equipment blanks (EBs) and additional sample volume for MS analysis will be collected at a minimum five percent frequency for each analysis. Temperature blanks will be placed in each sample cooler and the temperature recorded upon laboratory receipt. Frequency for collection of field QC samples is presented in Table A-4.

The field sampling team will also be responsible for collecting additional sample quantities at a frequency of five percent for MS and MSD analyses.

4.7 Specialized Training and Certification

Training shall be provided to all project personnel to ensure compliance with the site specific HASP and technical competence in performing the work effort. Documentation of this training shall be maintained in the records of the contracted organizations. PIKA-ARCADIS JV employees who participate in the types of activities defined in the Occupational Safety and Health Administration requirements under Code of Federal Regulations (CFR) 1910.120 complete the 40-hour health and safety training program. Each employee must successfully complete a minimum of 8 hours of refresher training annually to maintain the certification. Employee training records are maintained in the PIKA-ARCADIS JV office where the employee resides. Any special requirements for personal possession of certification cards will be adhered to as program appropriate.

All analytical chemistry laboratories performing analyses will be required to maintain current NELAP accreditation for the parameters of interest if accreditation is available. Accreditation certificates, audit reports, and performance testing data will be reviewed

by the Project Chemist, as appropriate to ensure that laboratory capabilities meet or exceed project requirements. Laboratories must also maintain internal training records for technical staff in accordance with standard laboratory practices and certification requirements. The laboratory will provide the applicable training records, including Initial Demonstration of Competence documentation, for review, as deemed necessary, by the PIKA-ARCADIS JV Project Chemist.

All subcontractors and their employees will have current and applicable performance and certifications required to perform the assigned SOW. Subcontract agreements will include the specific training and certification requirements and applicable records will be reviewed as appropriate. Subcontractor training and certification documentation will be maintained at the subcontractors' offices.

4.8 Documents and Records

The primary documentation for the project includes field records, analytical data packages, and summary reports. This section describes the level of documentation and record keeping for the central project file that will be maintained by the PIKA-ARCADIS JV office in Raleigh, North Carolina.

4.8.1 Document Control

All planning documents will be clearly identified by the document title, revision number, date, and page number of each document page. Planning documents currently in use will be reviewed on an annual basis and any necessary revisions or updates will be amended and distributed to each participating party. Documents prepared in support of the PBA contract will be prepared and distributed as required.

Original field records and laboratory analytical data will be maintained in the PIKA-ARCADIS JV Raleigh, NC office.

4.8.2 Field Documentation

Field documentation will include field logbook or daily logs, field sampling logs, instrument calibration logs, and data forms as necessary to provide sufficient information to allow review of field conditions, performance, and sample collection, to evaluate potential impacts to sample and data integrity, and to enable participants to reconstruct events that occurred during the field operations when necessary. Daily logs will also document any deviations from the SAP, QAPP, site or task specific work plans or other applicable planning documents and describe the rationale for the changes.

All entries will be made in waterproof ink, and the time of the entry will be recorded. The top of each page of the field documents will contain the date that the entries on that page were recorded. No pages will be removed from a bound logbook for any reason. Additional details on field documentation are provided in the SAP.

All documentation associated with field activities will be retained in the project file in accordance with the document retention policy stated in this QAPP and the QCP as applicable to the document type.

4.8.3 Corrections to Field Documentation

As with all bound data logbooks, no pages will be removed for any reason. If corrections are necessary on any field documentation, they will be made by drawing a single line through the original entry (so that the original entry can still be read) and writing the corrected entry alongside it. The correction must be initialed and dated. As necessary, corrected errors will include a footnote explaining the correction.

4.8.4 Photographs

Photographs will be taken as directed by the Site Manager. Documentation by a photograph will ensure the validity as a visual representation of an existing situation. A log will be developed to track the media that the photos are filed on (e.g., compact disc). Photographs, as developed or transferred to electronic media, shall be compiled into a photograph log and information recorded in field notebooks added to the log with appropriate photographs.

4.8.5 Laboratory Data Reporting/Record Retention

Analytical data reports for all samples will be prepared by the laboratory as a Level II Data Package. The Level II Data Packages will include a fully-executed chain-of-custody (COC) Record, sample receipt checklist, cross-reference table of field samples with laboratory sample number, preparation and analytical batch numbers, analytical results, collection and analysis dates and times, reporting limits (RLs), dilution factors, surrogate recoveries, method blank data. Summary QC data will be provided for LCS, MS accuracy and precision, laboratory replicate precision, laboratory control limits. The analytical report shall include the method detection limits (MDL), and the quantitative RLs. Appropriate data flags identifying any QC result reported outside control limits and an explanation of all data flags applied by the laboratory. The case narrative will present an explanation of all QC results reported outside control limits and samples analyzed at dilutions where all results are non-detect.

Where detailed data validation is required, analytical data reports will include the following items in addition to the elements of the Level II data package, sample aliquots, final extract volumes, run logs, quantitation reports, ion spectra, chromatograms, batch identification report clearly linking all QC results to field sample results, and instrument calibration and tuning information. The laboratory report will include copies of any nonconformance or corrective action forms associated with data generation. This level of analytical report components will be defined as a Level IV data package.

The RLs will be corrected for percent moisture (soils only) and all dilution factors. Any compounds found less than the RL, but greater than the MDL will be reported and qualified with a “J” flag as estimated. Soils will be reported on a dry weight basis.

The laboratory will provide an electronic data deliverable (EDD) that matches all data reported on the hard copy analytical report. Electronic data report requirements are described in Section 2.12.

The laboratory is required to retain all information associated with the analytical operations for samples associated with this project for a minimum of 6 years.

4.8.6 Electronic Data Retention

Electronic data and media retention policies will correlate with hard copy data retention at the laboratories as well as other points of electronic data generation. Additionally, electronic data will be subject to back-up routines that will enable recovery of data that may become corrupted or lost due to instrument, computer, and/or power failures. Electronic media will be stored in climate-controlled areas to minimize potential for degradation. Storage areas will be access limited.

5. Data Generation and Acquisition Elements

5.1 Sampling Process Design

The sampling process design will be presented in site-specific work plans.

5.2 Sampling Methods

The field sampling procedures, sampling methods and equipment are discussed in detail in the associated SAP and will be presented in site-specific work plans.

5.3 Sample Handling and Custody

Procedures to insure the custody and integrity of the samples begin at the time of sampling and continue through transport, sample receipt, preparation, analysis and storage, data generation and reporting, and sample disposal. Records concerning the custody and condition of the samples are maintained in field and laboratory records. All samples will be uniquely identified, labeled, and documented in the field at the time of collection and recorded on the COC form. Samples collected for laboratory QC will be clearly identified on the COC (e.g. MSs). Details for completing the COC are included in Section 4.2.17 of the SAP. Field custody procedures are presented in Section 4.3 of the SAP.

Samples collected in the field will be transported to the laboratory or field testing site as expeditiously as possible. Samples requiring preservation at 4 degrees +/- 2 degrees Celsius (^{o}C) will be packed in ice or chemical refrigerant to keep them cool during collection and transportation. Any concerns and/or deviations will be reported to the contractor immediately.

Once the samples reach the laboratory, they will be checked against information on the COC form for anomalies. The condition, temperature, and appropriate preservation of the samples will be recorded by the laboratory on a sample receipt checklist, and will be made part of the permanent project custody records. The occurrence of any anomalies in the received samples and their resolution shall be documented in laboratory records. All sample information shall then be entered into the laboratory tracking and data management system. The laboratory project manager shall review the log-in for accuracy and compliance with project requirements. Procedures ensuring internal laboratory COC shall also be implemented and documented by the laboratory. Specific instructions concerning the analysis specified for each sample shall be

communicated to the analysts. Analytical batches shall be created, and laboratory QC samples shall be introduced into each batch.

While in the laboratory, samples shall be stored in limited access, temperature controlled areas. Refrigerators, coolers and freezers used for sample storage will be monitored for temperature 7 days a week. Acceptance criteria for the temperatures of the refrigerators and coolers are 4ºC to 2ºC. Acceptance criteria for the temperatures of the freezers shall be less than 0ºC. All of the cold storage areas shall be monitored by thermometers that have been calibrated with a NIST traceable thermometer. As indicated by the findings of the calibration, correction factors shall be applied to each thermometer. Records that include acceptance criteria shall be maintained. Samples shall be stored separately from standards. Samples shall be stored after analysis until disposed of in accordance with applicable local, state, and federal regulations. Disposal records shall be maintained by the laboratory. SOPs describing sample control, custody, and disposal shall be maintained by the laboratory.

5.4 Sample Containers

The volumes and containers required for the sampling activities are listed in Table A-5. The laboratory will provide new, pre-cleaned sample containers. The laboratory shall use an approved specialty container supplier that prepares the containers in accordance with USEPA bottle preparation procedures. TBs will be transported to the site inside the same cooler/box as the VOC vials.

Sample container lids will not be mixed. All sample lids must stay with the original containers as provided by the supplier. Bottle lids (with any associated bottle) exhibiting cracks, splits, or chips shall be appropriately discarded.

5.5 Sample Preservation and Holding Times

New and pre-preserved (as appropriate) containers obtained from the laboratory shall be used for all samples requiring preservation. Chemicals used by the laboratory for preservation will be reagent-grade chemicals. The laboratory shall maintain traceability records for all preservatives in the event of potential contamination of samples. The laboratory must ensure that preservatives used in containers supplied will not expire within the anticipated time of sample collection completion. Each bottle received from the laboratory must be clearly labeled with the type of chemical preservative in the bottle and the test parameters that will be determined from the sample collected in the container. Sample containers will not be stored at the site for longer than 30 days. Bottle orders and any additional preservative requirements will be submitted to the

laboratory 5 working days prior to commencement of field operations to allow supplies of clean, fresh containers and preservatives to be shipped to the facility.

Sample preservation will be verified on receipt at the laboratory with the exception of aqueous VOC samples. VOC sample preservation shall be verified prior to analysis. The preservation or pH check will be recorded on the sample receipt form or other appropriate logbook. If the samples are improperly preserved, a corrective action form will be submitted to the laboratory project manager for follow-up action. The laboratory will notify the PIKA-ARCADIS JV Site Manager or Project Chemist to implement corrective actions in the field to ensure sufficient preservative is added at the time of sample collection.

Sample holding times will be based on published USEPA guidance and will be calculated for the date and time of collection. A list of preservatives and holding times for each type of analysis are presented in Table A-5. Additional preservation requirements and holding times for non-target analyses are listed in 40 CFR Part 136. Preservatives and holding times not listed in Table A-5 applicable to a specific task will be listed in the applicable work plan.

5.6 Analytical Methods

The primary analytical methods anticipated to be utilized for samples collected at HAA-01, HAA-13, HAA-15, and HAA-17 are provided in Table A-5. All methods are USEPA approved/published. Additional USEPA approved methods, which may be utilized, are published in references listed below. Specific performance criteria, including QA protocols, for each analytical method, are documented in the published methods, laboratory SOPs, and the laboratory QAM. The principal contract laboratory is Shealy. Shealy's QAM will be reviewed and retained by the PIKA-ARCADIS JV Project Chemist. If additional laboratory services are needed during execution of the project, the QAM for each analytical laboratory performing work will be reviewed as part of the procurement process and laboratory SOPs will be examined during onsite audits or as necessary. QAM is a generic term for the laboratory QA document, which describes the laboratory program to ensure data of known quality are generated. The QAM for each contracted laboratory will be incorporated by reference into this QAPP upon execution of the contract for analytical support.

5.6.1 Standard Laboratory Analytical Procedures

All standard analytical methods performed will be USEPA approved. The analytical methods are referenced in:

- *Test Methods for Evaluating Solid Waste, Physical Chemical Methods*, 3rd edition, SW-846, 1997.
- 40 CFR Part 136, *Guidelines Establishing Test Procedures for the Analysis of Pollutants under the Clean Water Act*; and
- *Methods for Chemical Analysis of Water and Wastes*, EPA-600/4-79-020, Revised March 1983.

The laboratory will perform all methods in accordance with the appropriate USEPA-approved methods and the laboratory specific SOPs for compliance with this QAPP (Attachment A-5) and other project-specific requirements. The laboratory shall have method specific SOPs for all methods performed. The SOPs will detail method set-up, calibration, performance, and reporting criteria in accordance with SOP preparation under NELAP guidance and requirements. Method performance will be in strict compliance with the SOP and referenced method. Laboratory SOPs will include any modifications to the published method and will indicate actual performance protocols performed by the laboratory. The laboratory will update SOPs in accordance with NELAP requirements. The PIKA-ARCADIS JV Project Chemist must approve any changes to the method performance acceptance criteria

The laboratory must notify the Project Chemist of any updated or revised RLs or performance control criteria prior to initiation of field operations. Required sample or extract dilutions to complete the analyses within method performance criteria may impact RLs. All required sample dilutions will be noted in the analytical report and explained in the case narrative. The laboratory shall make every effort to report all compounds/analytes at the lowest technically achievable limit to meet the risk screening standard requirements. The changes/elevations in limits will be evaluated to determine potential impact on DQOs. Any additional methods required for future projects will be specified in the SAP or the site-specific work plan.

5.7 Elements of Quality Control

This section presents QC requirements relevant to analysis of environmental samples that shall be followed. The purpose of this QC program is to produce data of known quality that satisfy the project objectives and that meet or exceed the requirements of the standard methods of analysis. This program provides a mechanism for ongoing control and evaluation of data quality measurements through the use of QC materials.

Laboratory QC samples (e.g., blanks and LCSs) shall be included in the preparation batch with the field samples. Preparation batch is a number of samples (not to exceed 20 samples) similar in composition (matrix) and that are extracted or digested at the same time and with the same lot of reagents. MS and MSD samples do not count as environmental samples. The term analytical batch also extends to cover samples that do not need separate extraction or digestion (e.g., VOCs analysis by purge and trap). The identity of each preparation batch will be unambiguously reported with the analyses so that a reviewer can identify the QC samples and the associated environmental samples. The type of QC samples and the frequency of use of these samples are discussed in the following section. The laboratory will provide spike results from site-specific field samples of groundwater and soil, not from another client or site. Additional QC samples may be added to those required by the method to ensure accurate and precise data. The frequency of analysis of laboratory QC samples is presented in Table A-6.

5.7.1 Laboratory Control Samples

The LCS is analyte free water (aqueous samples) or clean sand (soil/sediment matrix) spiked with known concentrations of specific analytes. The LCS shall be carried through the complete sample preparation and analysis procedure. The LCS is used to evaluate each preparation batch and to determine if the method is in statistical control. One LCS will be included with every analytical batch. All target analytes will be spiked in the LCS.

In accordance with method criteria and laboratory SOPs, an LCS analyte outside the recovery acceptance limit mandates corrective action unless the out of control scenario does not impact data usability. Where corrective action is required and after the system problems have been resolved with system control re-established, all samples in the analytical batch will be reanalyzed for the out of control analyte(s). When an analyte in an LCS exceeds the upper or lower control limit and no corrective action is performed, the appropriate validation flag, as described in the data validation section, will be applied to all affected results. LCS results will be compared to the laboratory LCS control limits.

5.7.2 Matrix Spike and Matrix Spike Duplicate

An MS is an aliquot of sample spiked with known concentrations of specific compounds. The spiking occurs prior to sample preparation and analysis. The laboratory will provide the results at a minimum of one MS and one MSD sample for every 20 environmental samples. The MS and MSD samples will be designated on the

COC form. Additional sample quantities will be collected so that MS and MSD analyses can be performed on the environmental samples collected at the Site. The full list of target analytes will be spiked into the samples utilized for the MS and MSD.

An MS is used to document the bias of a method in a given sample matrix. MS and MSD results are used to evaluate the matrix effect, not to control the analytical process. The recoveries of analytes in the MS/MSD will be compared to the laboratory QC acceptance limits also. If the recoveries for the MS or the MSD are outside the QC acceptance limits, sample data will be evaluated by the Project Chemist to determine extent of impact.

5.7.3 Surrogates

Surrogates are organic compounds that are similar to the target analyte(s) in chemical composition and behavior in the analytical process, but that are not normally found in environmental samples. Surrogates are used to evaluate accuracy, method performance, and extraction efficiency. Surrogates are added to samples, controls, and blanks, in accordance with the method requirements.

When the recovery of a surrogate is outside the acceptance limits, corrective action steps must be taken. After the system problems have been resolved and system control has been re-established, the sample is re-prepared and re-analyzed. Re-preparation and re-analysis is not required if the laboratory is able to provide objective evidence with the case narrative of the final report documenting matrix interference (that is, unresolved co-eluting peaks on reconstructed ion chromatograms, or observations about visibly oily samples). If corrective actions are not performed or are ineffective, the appropriate validation flags are applied to the sample results. Re-extractions will be done within the holding times. Laboratory surrogate recovery limits will be included in each analytical report.

5.7.4 Internal Standards

Internal Standards (ISs) are measured amounts of certain compounds added after preparation or extraction of a sample. They are used in an IS calibration method to correct sample results affected by column injection losses, purging losses, or viscosity effects. ISs are added to samples, controls, and blanks, in accordance with the method requirements.

When the IS results are outside of the acceptance limits, corrective actions shall be performed. After the system problems have been resolved and system control has

been re-established, samples analyzed while the system was malfunctioning are re-analyzed. If corrective actions are not performed, the appropriate validation flag, as described in the data validation section of this QAPP.

5.7.5 Retention Windows

Retention time windows are used in GC analysis for qualitative identification of analytes. They are calculated from replicate analyses of a standard on multiple days. The procedure and calculation method are given in SW-846 Method 8000A.

When the retention time is outside of the acceptance limits, corrective actions will be performed. After the system problems have been resolved and system control has been re-established, samples analyzed since the last acceptable retention time check are re-analyzed. If corrective actions are not performed, the appropriate validation flag, as described in the validation section, will be applied to the sample results.

5.7.6 Method Blank

A method blank is an analyte free matrix to which all reagents are added in the same volumes or proportions as used in sample processing. The method blank will be carried through the complete sample preparation and analytical procedure. The method blank is used to document contamination resulting from the analytical process. A method blank will be included in every analytical batch and representative for each sample matrix.

The presence of analytes in a method blank at concentrations greater than the MDL or RL for common laboratory contaminants indicates a need for corrective action. Corrective actions will be performed to eliminate the source of contamination prior to proceeding with analysis. After the source of contamination has been eliminated, all samples in the analytical batch will be re-prepared and re-analyzed. No analytical data will be corrected for the presence of analytes in blanks. When an analyte is detected in the method blank, but not in the associated samples, no corrective action is necessary. When an analyte is detected in the blank and in the associated samples and corrective actions are not performed, the appropriate validation flag, as described in the data validation section, will be applied to the sample results.

5.7.7 Equipment Blank

An EB is a sample of organic free water (for VOCs analyses) poured into, or over, or pumped through the sampling device, collected in the sample bottle, and transported to

the laboratory for analysis. EBs are used to assess the effectiveness of equipment decontamination procedures.

EBs are collected immediately after the equipment has been decontaminated. The frequency requirements for collecting EBs are a minimum of five percent of the environmental samples. The blank shall be analyzed for all laboratory analyses requested for the environmental samples collected at the Site. When an analyte is detected in the EB the appropriate validation flag, as described in the data validation section, shall be applied to all sample results from samples collected. It should be noted that the laboratory will supply the organic free water. A sample aliquot of the organic free water will be submitted for the analysis of all parameters of interest.

5.7.8 Trip Blank

The TB consists of a VOC sample vial filled in the laboratory with American Society for Testing and Materials Type II reagent grade water, transported to the sampling site, handled like an environmental sample and returned to the laboratory for analysis. TBs are not opened in the field. TBs are prepared only when VOC samples are taken and are analyzed only for VOC analytes. TBs are used to assess the potential introduction of contaminants from sample containers or during the transportation and storage procedures.

When an analyte is detected in the TB the appropriate validation flag as described in the validation section, shall be applied to all sample results from samples in the cooler with the affected TB. One TB of either soil or liquid matrix shall accompany each cooler of samples submitted to the laboratory for VOC analysis.

5.7.9 Field Duplicates

A field duplicate sample is a second sample collected at the same location as the original sample. Duplicate samples are collected simultaneously or in immediate succession, using identical recovery techniques, and treated in an identical manner during storage, transportation, and analysis. The sample containers are assigned an identification number in the field such that they cannot be identified (blind duplicate) as duplicate samples by laboratory personnel performing the analysis. Specific locations are designated for collection of field duplicate samples prior to the beginning of sample collection.

Field duplicate sample results are used to assess precision, including variability associated with both the laboratory analysis and the sample collection process. Field

duplicates will be collected at a frequency of 5 percent of samples collected. Analytical results for field duplicate will be assessed during the data validation process. Specific locations will be designated for collection of field duplicate samples prior to the beginning of sample collection. Control limits for evaluation of precision for field duplicates will be 40 percent for aqueous samples and 70 percent for soil/sediment samples.

5.8 Instrument/Equipment Testing, Inspection, and Maintenance

Field equipment inspection and testing will be completed daily to ensure equipment is in proper working order prior to use. Field equipment maintenance will be completed on an as needed basis and in accordance with instrument operation manual.

Maintenance responsibilities for laboratory instruments are assumed by the respective Laboratory Facility Manager. The managers then establish maintenance procedures and schedules for each major equipment item. This responsibility may be delegated to field or laboratory personnel, although the managers retain responsibility for ensuring adherence to the prescribed protocols. All field instrument/equipment will be inspected prior to the project initiation.

5.8.1 Maintenance Schedules

The effectiveness of any maintenance program depends to a large extent on adherence to specific maintenance schedules for each major equipment item. Other maintenance activities are conducted as needed. Manufacturers' recommendations provide the primary basis for the established maintenance schedules, and manufacturers' service contracts provide the primary maintenance for many major instruments.

5.8.2 Spare Parts

Along with a schedule for maintenance activities, an adequate inventory of spare parts is required to minimize equipment downtime. The inventory includes those parts (and supplies) that are subject to frequent failure, have limited useful lifetimes, or cannot be obtained in a timely manner should failure occur.

Field sampling task leaders and the respective laboratory managers are responsible for maintaining an adequate inventory of spare parts. In addition to spare parts and supply inventories, the contractor shall maintain an in house source of backup equipment and instrumentation.

5.9 Instrument/Equipment Calibration and Frequency

Field equipment will be calibrated at the frequency recommended by the manufacturer's specifications and/or described by the analytical method. Calibration will be documented on a Field Equipment Calibration form, where each instrumented calibrated is identified along with the date, time, calibration reading, and field staff initials.

Analytical instruments will be calibrated in accordance with the procedure specified in the analytical methods. All analytes that are reported shall be present in the initial and continuing calibrations, and these calibrations must meet the acceptance criteria specified in the analytical method. Records of standard preparation and instrument calibration will be maintained by the laboratory. Records shall unambiguously trace the preparation of standards and their use in calibration and quantitation of sample results. Instrument calibration will be checked using all of the analytes. All calibration criteria will satisfy SW-846 requirements at a minimum. The initial calibration will be checked at the frequency specified in the methods using materials prepared independently of the calibration standards.

5.10 Inspection/Acceptance of Supplies and Consumables

The laboratory will inspect supplies and consumables prior to their use in analysis. The materials description in the methods of analysis shall be used as a guideline for establishing the acceptance criteria for these materials. Introduction of interfering compounds into the analytical process will be monitored by analysis of method blanks. Purity and efficiency of reagents shall be monitored by analysis of LCSs. An inventory and storage system for these materials will assure use before manufacturers' expiration dates and storage under safe and chemically compatible conditions.

Sample containers will be laboratory supplied. All containers will be certified clean and the certificates will be retained by the laboratory. Containers are stored in clean areas to prevent exposure to fuels, solvents, and other contaminants.

5.11 Non-Direct Measurements

Non-direct measurement data will be entered into the project file. Data will be entered from forms, tables and data packages as presented in the documents/reports. All data entry will be peer reviewed prior to finalization.

5.12 Data Management

The data reduction, review, reporting, and validation procedures described in this section will ensure that (1) complete documentation is maintained, (2) transcription and data reduction errors are minimized, (3) the data are reviewed and documented, and (4) the reported results are qualified, as necessary. Laboratory data reduction and verification procedures are required to ensure that the overall objectives of analysis and reporting meet method and project specifications.

5.12.1 Electronic Data Management

Data management protocols track samples and results from work plan implementation to the final report. The field data include approved work planning tables, labels, field sampling forms, COC, and logbooks. Geographic coordinates will be generated for all sample locations in electronic format. Field data will be collected using portable data acquisition devices or manually entered into a database or spreadsheet. The Field Operations Leader or designee will review all field data for accuracy.

The laboratory will provide an EDD for all analytical reports. The EDD will be in the format required for the project environmental database and include, at a minimum, the following information:

- Laboratory information – Laboratory name, client name, laboratory work order, client project number, and date received;
- Sample information – Laboratory project number, sample identification, laboratory sample identification, date sampled, time sampled, matrix;
- Analytical Data – Sample Delivery Group (SDG), test code, test name, analyte, analyte type, sample type, CAS number, date and time prepared, date and time analyzed, preparation batch identification, analytical batch identification, result, laboratory qualifier, MDL, RL, and dilution factor; and
- QC Data – All fields provided for analytical data will also be populated for method blanks, surrogates for all samples, LCS, MS/MSD, and laboratory replicates. QC sample data will also include QC Sample Type, recoveries, RPDs, control limits, and any associated qualifiers. Calibration data are not required.

The Project Chemist, Data Manager, or designee will review approximately 5 percent of electronic laboratory and field data to verify the results against the hard copy and check for transcription errors. A greater than 15 percent discrepancy rate in two consecutive datasets will require additional review and verification. Electronic data will match the hard copy data for all results. Significant figures and rounding routines may differ slightly based on the program utilized to generate hard copy reports and electronic files, but may not differ to the point of impacting data integrity or usability. The results will be transferred to a centralized database. The PIKA-ARCADIS JV Data Manager or data validator will add any data qualifiers. The Data Manager will generate data tables for the project team as required. The Project Chemist and Site Manager will resolve discrepancies between the planned activities and actual data collected and document the findings in the data report. The central database will be stored in a secure area with access limited to data management specialists designated by the Project Manager. The central database will be electronically linked to a geographic information system/computer-aided design systems, risk assessment programs, and other final data user models and statistical programs. Data users may enter additional electronic data such as risk-based criteria for comparison of the results. This data will be stored in separate tables in the database and linked to the actual results. Any data from outside sources will include a description of the data, a reference to the source, and the date updated. The outside data will be checked prior to use in order to verify that the most current values are used.

5.12.2 Field Data Review

All field data and the required forms will be reviewed by the author prior to submittal to the Site Manager or designee for review. Any field forms or documentation requiring amendments and/or corrections will be clearly documented on the corresponding day's field form or logs and initialed. Corrections will be made by a single line, followed by initials. The Site Manager or designee will verify the field review then submit the documents for data entry and/or retention in the project file.

5.12.3 Laboratory Data Review

The analytical laboratory will perform a series of internal reviews/audits prior to submittal of the final data package.

5.12.3.1 Laboratory Internal Review

In each laboratory analytical section, the analyst performing the tests shall review 100 percent of the data. After the analyst's review has been completed, 100 percent of the data shall be reviewed independently by a senior analyst or by the supervisor of the respective analytical section using the same criteria.

Data qualifiers shall be added by the laboratory supervisor of the respective analytical section, after the first and second level of laboratory data reviews have been performed. Analytical batch comments shall be added to the first page/Case Narrative of the data report packages to explain any non-conformance or other issues. When data are qualified, the laboratory supervisor shall apply a final qualifier to any data that have been affected by multiple qualifiers. This final qualifier shall reflect the most severe qualifier that was applied to the data, that is, all data will have only one data qualifying flag associate with it.

The laboratory QA section shall review 10 percent of the completed data packages, and the laboratory project manager shall perform a sanity check review on all the completed data packages. The laboratory shall apply appropriate data qualifying flags to any impacted field sample including field QC samples.

The laboratory will submit the analytical data package and EDD to PIKA-ARCADIS JV via email and on compact disk. The analytical report will be complete and signed and submitted in portable document format (pdf). The EDD shall be prepared in accordance with the protocols defined by PIKA-ARCADIS JV for input into the electronic data management system.

5.12.3.2 Analytical Report and Data Management

Upon submittal of the data package (report and EDD), the data will be logged in by the data manager as received and the EDD loaded into the project database. The Data Manager will forward the analytical data to the Project Chemist or designee for review and validation in accordance with Section 3 of this QAPP. The data package, at a minimum, will be reviewed to assure completeness and that the EDD matches the report. Once the analytical data package is determined to be final and complete and as validated, the data with any applicable data qualifiers will be added to the project database. Any data validation reports will be submitted to the Data Manager archiving with the analytical report. The data will then be available for distribution to the project team. Upon completion, the analytical data package, EDD, and validation report will be submitted to the project file.

5.12.4 Archiving

The laboratory shall maintain electronic and hardcopy records sufficient to re-create each analytical event conducted for a minimum of 6 years. Data will be accessible within 7 working days upon request. PIKA-ARCADIS JV will retain the project files for at least 6 years.

6. Assessment and Oversight

6.1 Assessment and Response Actions

Assessment activities include management and assessments, technical systems audits, and performance evaluations. Management assessments include routinely scheduled meetings and conference calls to evaluate staff utilization. Assignment of qualified personnel to projects, maintenance of schedules and budgets, and quality of project deliverables are verified as part of these assessments. Performance evaluations are used to ensure that trained and qualified staff is utilized for the project. Technical assessment activities include peer review, data quality reviews, and technical system audits (i.e., laboratory and field). Technical systems audits include review and evaluation of field and laboratory performance to assess the implementation of quality programs and directives specifically for the project. Procedures for assessment and audit of data quality are described in Section 4 of this QAPP. Procedures for peer review and technical assessments are summarized briefly below. Both the overall and direct technical assessment activities may result in the need for corrective action. The procedure for corrective action response is summarized below.

6.1.1 Peer Review

All project deliverables including work plans, SAPs, draft and final reports, and technical memoranda will be peer reviewed by PIKA-ARCADIS JV. The peer review process provides for a critical evaluation of the deliverable by an individual or team to determine whether the deliverable will meet the established criteria, DQOs, technical standards, and contractual obligations. The Project Manager will assign peer reviewers, depending on the nature and complexity of the project, when the publication schedule is established. The Project Manager will be responsible for ensuring all peer reviewers participate in the review process and approve all final deliverables. The QA Manager is responsible for verifying that project documents were generated in accordance with the project requirements.

6.2 Corrective Action

Corrective actions will be implemented as necessary to insure that project activities are performed and data are generated in accordance with the project quality documents. In conjunction with the QA Manager and Project Chemist, the Project Manager and Site Managers are responsible for initiating and implementing corrective action in the field and in the office. The laboratory project manager, in conjunction with the laboratory

technical staff and QA manager, is responsible for implementing corrective action in the laboratory. It is the combined responsibility to insure that all analytical procedures are followed as specified and that the data generated meet the prescribed acceptance criteria. Specific corrective actions necessary will be clearly documented in the logbooks or analytical reports.

In all cases in which corrective actions of field procedures are required, a written report describing the nature of the problem, an evaluation of the cause, if known, and the action taken will be prepared by the PIKA-ARCADIS JV Site Manager or the PIKA-ARCADIS JV QAO. The report will be distributed to the PIKA-ARCADIS JV Project Manager, the PIKA-ARCADIS JV QAO (if not preparing the report), and the PIKA-ARCADIS JV Project Director.

Any corrective actions taken by the contract laboratory will be reported to the PIKA-ARCADIS JV Project Chemist. The laboratory will include in each data package a discussion of the problems encountered and corrective actions taken. In addition, the laboratory will maintain a file that documents all corrective actions taken. Reports of corrective actions undertaken during laboratory analysis will be documented, as appropriate, in the Data Validation Report.

6.3 Performance and Data Quality Reports

Data Validation Reports - Data validation reports will be completed by the Project Chemist as soon as possible after receipt of the data from the laboratory (i.e., the goal is within 3 weeks). Impacts on the usability of the data will be tracked by adding qualifiers to individual data points as described in Section 4.

Serious analytical problems will be reported immediately to the PIKA-ARCADIS JV Project Chemist by the laboratory project manager. The PIKA-ARCADIS JV Project Chemist will notify the PIKA-ARCADIS JV Site Manager and Project Manager to evaluate necessity for resampling or additional sample collection. Time and type of corrective action (if needed) will depend on the severity of the problem and will be related to overall project importance of the data points. Corrective actions may include altering procedures in the field, conducting an audit, resampling or modifying laboratory protocol.

Project Status Reports - Project status reports are completed by the Project Manager to document the overall assessment of the project on a monthly basis. The Project Status Report tracks the overall quality of performance relative schedule, budgets and other issues.

7. Data Validation and Usability

The general procedures for data validation and usability are described below. These procedures will be adapted, if necessary, to meet project-specific or activity-specific requirements. Data validation and usability criteria set forth in this QAPP shall be followed unless otherwise amended in the SAPs or work plans which will address any modifications to data review criteria not included in this QAPP.

7.1 Data Review, Verification, and Validation

Data generated will be reviewed for conformance with the QAPP, SAP and other applicable work plans, as well as specific project requirements. QA information provided by the laboratory will be evaluated relative to the methods performed, the laboratory SOPs, the laboratory QAM, COC requests, Laboratory Task Orders (LTOs) or similar directive document, and this QAPP, as appropriate. The laboratory will be responsible for internal review of all calibrations, raw data, and calculations. The final analytical report will be reviewed by the laboratory project manager and other appropriate laboratory management personnel for compliance with the above listed documents including peer and supervisory review prior to releasing data to PIKA-ARCADIS JV.

The PIKA-ARCADIS JV Project Chemist and data validation team will perform additional verification and validation of laboratory data to assess the quality and usability of the data generated. Field record review will include instrument calibration logs, sampling logs, COC records, field notes, and field parameter results. The field information assessment will evaluate the potential for impact to sample integrity and chemical data quality.

Chemical analytical data collected will be reviewed and, as appropriate, qualified using guidelines established in the USEPA National Functional Guidelines modified to incorporate method and project-specific requirements. The analytical data review will be performed under either of two levels: Tier 2 or Tier 3. The frequency and components included in each tier are defined in Sections 4.2.2.1 and 4.2.2.2.

7.2 Verification and Validation Methods

The data review scheme for analytical results from the receipt of the analytical data through the validated report is described below. The laboratory is responsible for performing internal data review. The data review by the analytical laboratory will include 100 percent analyst review, 100 percent peer review, and 100 percent review

by the laboratory project manager to verify that all project-specific requirements are met. The laboratory QA Officer will perform a review on 10 percent of the data packages. All levels of laboratory review will be fully documented and available for review if requested or if a laboratory audit is performed.

After receipt from the laboratory, project data will be verified and validated by PIKA-ARCADIS JV or experienced contract personnel using the following steps.

7.2.1 Evaluation of Completeness

The Project Chemistry Team will verify the following report content for all data, as appropriate, for the required level of data validation:

- Laboratory information matches the field information;
- Fully executed COC records;
- Report completeness and conformance with COC, LTO, QAPP, Site-Specific Work Plan, and other project requirements;
- Case narrative describing any out-of-control events and summarizing analytical observation or non-conformances;
- Sample receipt information;
- Data report forms;
- QA/QC summary data;
- Initial and continuing calibration information (Tier 3 validation);
- Instrument tuning data (Tier 3 validation);
- Quantitation reports (Tier 3 validation);
- Batch and/or run logs (Tier 3 validation);
- Chromatograms (Tier 3 validation); and
- Documentation of any QC problems.

If the data package is incomplete, the Project Chemist will contact the laboratory, which must provide all missing information within a reasonable timeframe (i.e., 1 to 2 days).

7.2.2 Evaluation of Compliance

The data validation procedures are briefly outlined below:

- Electronic checking routines (Tier I validation) will be utilized to check 100 percent of the field and laboratory QC data (LCS, MS/MSD, blanks) to verify that holding times and acceptance and performance criteria were met and to note any anomalous values. Appropriate data qualifiers (Section 4.3) will be applied to the data where deficiencies are identified;

- All chemistry data generated with the exception of waste characterization, storm water discharge, and remedial system operational monitoring will undergo a Tier 2 validation. Initially, one SDG for each matrix will undergo the detailed Tier 3 validation to ensure laboratory performance;

- All data will be checked to ensure all analytical problems and corrections are reported in the case narrative and that appropriate laboratory qualifiers are added; and

- For any problems identified, concerns will be reviewed with the laboratory, additional information will be obtained if necessary, and all related data will be checked to determine the extent of the error. Data qualifiers will be applied to the analytical results to indicate potential limitations on data usability.

The data validation team will follow qualification guidelines in USEPA *Contract Laboratory Program National Functional Guidelines for Organic Data Review*, EPA 540/R-99/008, October 1999; USEPA *Contract Laboratory Program National Functional Guidelines for Inorganic Data Review*, EPA 540/R-01/008, July 2002a; USEPA *Contract Laboratory Program National Functional Guidelines for Inorganic Data Review*, EPA 540/R-04/004, October 2004; Laboratory QAM; Laboratory Methods; and the QAPP with performance criteria based on the published analytical methods and laboratory established control limits.

7.2.2.1 Tier 2 Verification

Tier 2 data verification includes a review of all sample documentation coupled with electronic data screening and manual review. The analytical report will be assessed for completeness and for compliance with COC requests, LTO, SAP, and any additional

work plan documents. The electronic data compliance will be conducted utilizing the EQuIS Data Qualification Module (DQM), a module within the Earthsoft suite of environmental data management products. All analytical data will be managed within the EQuIS Chemistry database via electronic uploading of laboratory data. The DQM is written in Visual Basic for the EQuIS database and checks for the following parameters:

- Blank contamination;
- MS and MSD recoveries;
- MS/MSD RPD;
- LCS and LCSD recoveries;
- LCS/LCSD RPDs (when available);
- Surrogate recoveries;
- Field duplicate RPDs; and
- Holding times.

The DQM routines apply appropriate qualifiers to the data. Select manual reviews will verify appropriate qualifier application. Data Qualifiers will not be manually applied to original hard copy analytical reports. The validation reports will be included with any submittal of analytical reports to agencies or other required party

7.2.2.2 Tier 3 Validation

One SDG for each matrix collected during the initial phases of the project will undergo a detail data validation which will include the complete Tier 2 assessment and review of the additional following information relative to target compounds/analytes:

- Instrument tune;
- Initial calibration;
- Continuing calibration;
- Interference check standards (metals only);

- Serial dilutions (metals only);
- Quantitation reports;
- Internal standard area (organics only);
- Retention times (as applicable by method);
- Chromatograms (as applicable by method);
- Ion spectra for compound identification;
- Data transcription from instrument report to hard copy report; and
- A subset of calculations will be verified for each sample.

7.2.3 Data Validation Reporting

The Project Chemist will perform the following reporting functions:

- Alert the QA Manager and the Site Manager to any QC problems, obvious anomalous values, or discrepancies between the field and laboratory data and resolve any issues;
- Discuss QC problems in a data validation memo for each laboratory report;
- Review the laboratory EDD and electronic field data, enter the data qualifiers into the database, and oversee preparation of analytical data summary tables. The tables will summarize those samples and analytes for which detectable concentrations were exhibited as well as complete analytical summary tables. The tables will include field QC samples; and
- Prepare a summary of the quality control information at the completion of all field and laboratory efforts for the site. The report will summarize planned versus actual field and laboratory activities and data usability concerns.

The Project or Site Manager provides the final Data Quality Assessment during the technical review of the data report.

7.2.4 Validation Reports

Reports will be generated for each data package or combination of data packages for a single sampling event to record the results of the validation effort. The reports will identify all deficiencies and the impact on the results. The data validator or the Data Manager will append qualifiers generated during the verification/validation process to the EQuIS database and a summary table of the data qualifiers will be included with the analytical report.

7.3 Reconciliation with Data Usability Requirements

For routine assessments of data quality, PIKA-ARCADIS JV will implement the data verification/validation procedures described in Section 4.2 and assign appropriate data qualifiers to indicate limitations on the data. The Project Chemist will be responsible for evaluating precision, accuracy, representativeness, comparability, and completeness of the data using procedures described in Section 1.4. Any deviations from the analytical DQOs for the project will be documented in the data verification/validation memo and provided to the data users for the project. The Project Chemist will work with the final users of the data in performing data quality assessments. The data quality assessment may include some or all the following steps:

- Data that are determined to be incomplete or not usable for the project will be discussed with the project team. If critical data points are involved which impact the ability to complete the project objectives, the data users will report immediately to the Site Manager. The Site Manager will discuss the resolution of the issue with the PIKA-ARCADIS JV Project Manager and implement the necessary corrective actions (for example, resampling);

- Data that are non-detect but have RLs elevated due to blank contamination or matrix interference will be compared to screening values (see Attachment A-3). If RLs exceed the screening values, then the results will be handled as appropriate for data use; and

- Data qualified as estimated will be utilized if it is determined that the data are useable for their intended purpose. If an estimated result is close to a screening value, then there is uncertainty in any conclusions as to whether the result exceeds the screening value. The data user must evaluate the potential uncertainty in developing recommendations for the site. If estimated results become critical data points in making final decisions on the site, the Site Manager should evaluate the use of the results and may consider the data point incomplete.

In the validation process there are two types of data validation codes that may be applied, those related to identification (confidence concerning the presence or absence of compounds) and those related to quantitation. Each of the standard data validation codes is defined below:

R	Data point is unusable due to serious deficiencies in analytical and QC criteria. The presence or absence of the analyte/compound cannot be verified
UB	Not detected substantially above the level reported in laboratory or field blanks. For organics - 5X (10X for common lab contaminants) or for metals - 10X. Data point considered non-detect at the value qualified.
U	Analyte/Compound not detected. The associated value indicates the concentration above which the result would be considered a quantitative value.
J	Reported value is considered an approximate concentration.
UJ	Analyte/compound not detected above the quantitation limit. However, the reported quantitation limit is approximate.

The ultimate data assessment process involves comparing analytical results to screening values and background concentrations to determine whether the contamination present is site related (i.e., above background levels) or significant (i.e., above screening values). Additional data assessment may be performed on site-by-site basis. Any additional procedures for data quality assessment will be provided in the Site Specific Work Plan.

8. References

40 CFR Part 136, Guidelines Establishing Test Procedures for the Analysis of Pollutants under the Clean Water Act.

ARCADIS. 2009a. Revised Corrective Action Plan – Part B Addendum #1, Former Pumphouse #1 (Release #1), October.

ARCADIS. 2009b. Fifteenth Semiannual Monitoring Report with Addendum #1 to Revised Corrective Action Plan – Part B, October.

ARCADIS, 2011. Compliance Status Report, Revision 1,HAA-15 (MAC Barracks Site), Hunter Army Airfield, Georgia, HSI Site Number 10521, November.

ARCADIS, 2012. Compliance Status Report, Revision 1, HAA-17 – Installation-Wide Groundwater including TCE Groundwater Contamination, Hunter Army Airfield, Georgia, HSI Site Number 10903, March.

ARCADIS, 2012. Compliance Status Report, Revision 1, HAA-01 (Former Fire Training Area and DAACG Chlorinated Solvent Area), Hunter Army Airfield, Georgia, HSI Site Number 10395, April.

Georgia Department of Natural Resources (GADNR). 2010. Protected Species List by County. May. URL: http://www.georgiawildlife.com/node/1370

HydroGeoLogic, Inc. (HGL). 2007. Draft Corrective Action Plan, MCA Barrack Site, Hunter Army Airfield, August.

National Recreation Lake Study Commission. 1999. Reservoirs of Opportunity. Final Report. July 2009. Available at: www.doi.gov/nrls

SAIC, 2005. Addendum to the Compliance Status Report for the Former Fire Training Area (HAA-01), HSI Site Number 10395, Hunter Army Airfield, Georgia. April.

USEPA. 1983. Methods for Chemical Analysis of Water and Wastes, Environmental Monitoring and Support Laboratory, Cincinnati, OH, EPA-600/4-79-020, March.

USEPA. 1997. Test Methods for Evaluation Solid Waste: Physical/Chemical Methods, Update IIIA. SW-846, Office of Solid Waste and Emergency Response, Washington, DC.

USEPA. 1999. USEPA Contract Laboratory Program National Functional Guidelines for Organic Data Review. Office of Emergency and Remedial Response, EPA540/R-99/008 (OSWER 9240.1-05A-P), October.

United States Environmental Protection Agency (USEPA), 2001. ECO-Update: Role of Screening-level Risk Assessments and Refining Contaminants of Concern in Baseline Ecological Risk Assessments. Accessed 2001. URL: http://www.epa.gov/superfund/programs/risk/ecoup/slera0601.pdf

USEPA. 2002. USEPA Contract Laboratory Program National Functional Guidelines for Inorganic Data Review, Office of Emergency and Remedial Response, EPA 540-R-01-008 (OSWER 9240.1-35), July.

USEPA. 2002. Guidance for Quality Assurance Project Plans, EPA QA/G-5,Office of Environmental Information, EPA/240/R-02/009, December.

USEPA. 2004. USEPA Contract Laboratory Program National Functional Guidelines for Inorganic Data Review, Office of Superfund Remediation and Technology Innovation, EPA 540-R-04-004 (OSWER 9240.1-45), October.

USEPA. 2006. Guidance on Systematic Planning and Using the Data Quality Objectives Process; EPA /240/B-06 QA/G-4.

United States Fish and Wildlife Service (USFWS), 2010. Endangered Species Program online database. URL: http://www.fws.gov/endangered/

United States Geological Survey (USGS), 2010. Clarke, J.S., and Painter, J.A., 2010, Hydrology, water quality, and water-supply potential of ponds at Hunter Army Airfield, Chatham County, Georgia, November 2008 –July 2009: U.S. Geological Survey Scientific Investigations Report 2009–5265, 34 p.

USGS 2012. Hydrogeologic Charateristics and Water Quality of a Confined Sand Unit in the Surficial Aquifer System, Hunter Army Airfield, Chatham County, Georgia, 2012-5082.

Tables

Table A-1. Project Team Contact Information and Document Distribution Information

Name and Contact Information	Project Function	Hard Copies	CDs	Email
Paul Higgs U.S. Army Environmental Command 2450 Connell Road, lst Floor Bldg 2264 Fort Sam, Houston, 78234-7664 Phone: (210) 466-1727 Cell: (210) 834-6954 paul.a.higgs@us.army.mil	USAEC Contracting Officer's Representative	0	1	0
Algeana Stevenson Hunter Army Airfield DPW Prevention and Compliance Branch 106 MacArthur Circle Bldg 615 Savannah, GA 31409 Office: (912) 315-5144 Cell: (912) 210-2950 Fax: (912) 315-5148 algeana.l.stevenson.civ@mail.mil	HAAF Installation Program Manager	3	2	0
Zsolt Haverland USACE Savannah District 100 W. Oglethorpe Avenue Savannah, GA 31401 Office: (912) 652-5815 Fax: (912) 652-6040 Zsolt.E.Haverland@usace.army.mil	USACE Technical Oversight	1	2	0
Amy Potter Georgia Department of Natural Resources Environmental Protection Division 2 Martin Luther King Jr. Drive Suite 1152, East Tower Atlanta, GA 30334 Office: (404) 463-0080 Fax: (404) 463-7669 amy_potter@mail.dnr.state.ga.us	GAEPD DoD Restoration Unit Coordinator	2	2	0
A. Mohamad Ghazi, Ph. D. Georgia Environmental Protection Division 2 Martin Luther King Jr. Drive Suite 1152, East Tower Atlanta, GA 30334 Office: (404) 463-7507 Fax: (404) 463-7669 mo_ghazi@dnr.state.ga.us	GAEPD DoD Restoration Unit			

Name and Contact Information	Project Function	Hard Copies	CDs	Email
William Logan Georgia Environmental Protection Division 4244 International Parkway Suite 104 Atlanta, GA 30334 Office: (404) 362-4529 Fax: (404) 362-2654 William.Logan@dnr.state.ga.us	GAEPD USTMP Corrective Action Unit II	1	0	0
Shelley Gibbons ARCADIS U.S., Inc. 801 Corporate Center Dr., Suite 300 Raleigh, NC 26707 Phone: 919-415-2256 Cell: 864-704-3752 shelley.gibbons@arcadis-us.com	PIKA-ARCADIS JV Project Manager	0	0	1
Richard Murphy ARCADIS U.S., Inc. 630 Plaza Drive, Suite 100 Highlands Ranch, CO 80129 Phone: 720-344-3804 Cell: 303-475-5210 richard.murphy@arcadis-us.com	PIKA-ARCADIS JV QA Manager	0	0	1
Scott Bostian, P.E. ARCADIS U.S., Inc. 801 Corporate Center Dr., Suite 300 Raleigh, NC 26707 Phone: 919-415-2291 Cell: 919-417-2643 scott.bostian@arcadis-us.com	PIKA-ARCADIS JV Site Manager	0	0	1
Holly Nelson ARCADIS U.S., Inc. 14025 Riveredge Drive, Suite 600 Tampa, FL Phone: 813-353-5749 Cell: 352-514-6909 holly.nelson@arcadis-us.com	PIKA-ARCADIS JV Site Manager	0	0	1

Name and Contact Information	Project Function	Hard Copies	CDs	Email
Rachelle Borne ARCADIS U.S., Inc. 3850 N. Causeway Blvd. Metairie, LA 70002 Phone: 504-393-9813 Cell: 504-400-3476 rachelle.borne@arcadis-us.com	PIKA-ARCADIS JV Project Chemist	0	0	1
Thomas Burgess ARCADIS U.S., Inc. 17-17 Route 208 North, 2nd Floor Fair Lawn, NJ Phone: 201-398-4495 Cell: 201-725-0801 thomas.burgess@arcadis-us.com	PIKA-ARCADIS JV Health and Safety Manager	0	0	1
Abhi Ruthirarajah ARCADIS U.S., Inc. 35 Columbia Road Branchburg, NJ 08876 Phone: 732-221-4426 abhi.ruthirarajah@arcadis-us.com	PIKA-ARCADIS JV Database Manager	0	0	1

Notes:

DoD - Department of Defense

GAEPD - Georgia Environmental Protection Division

HAAF - Hunter Army Airfield

PIKA-ARCADIS JV - PIKA International, Inc. - ARCADIS U.S., Inc. Joint Venture

USACE - U.S. Army Corps of Engineers

USAEC - U.S. Army Environmental Command

USTMP – Underground Storage Tank Management Program

Table A-2. Data Quality Objectives for Site Characterization.

Data Quality Objective	Project Specific Action
Problem statement	Historical activities have contributed to environmental impacts to surface and subsurface soil, surface water and groundwater at the military facilities. The project goals include delineation of environmental impacts and achieving remedy in place or response complete in accordance with the timeline set forth in the performance based contract. To achieve these goals, characterization activities shall be performed in accordance with the sampling and analysis plans, implementation of remedial actions, monitoring of remedial performance, and confirmation of attainment of clean-up goals.
Identify the decisions	• Do constituent concentrations exceed the screening criteria? • Has the Site been delineated? • What remedial system will be used to reduce constituent concentrations? • Does the remedial system meet the performance goals?
Identify the inputs to the decision	• Complete additional delineation sampling and compare identified CoC data to screening levels; and define extent of contamination. • Design and implement remedial systems • Monitor remedial system performance • Confirm reduction in contaminant levels to below clean-up goals.
Develop the decision rule	• If soil and groundwater quality data indicate concentrations above screening levels, the affected media will be addressed by additional site investigation to delineate the nature and extent of impact to the affected media. • When the Site is delineated, the soil and groundwater quality data will be evaluated to determine if an active remediation is required to reduce the concentrations below the clean-up goals. • If the remedial system does not meet the performance goals, modifications to the existing system and/or an additional or alternative remedial system will be implemented.
Specify limits on decision errors	Data quality and usability will be determined in accordance with the criteria set forth in the QAPP. Rejected data will not be used for decision-making purposes.

CoC Constituent of Concern.
QAPP Quality Assurance Project Plan.

Table A-3 Statistical Calculations

Statistical	Symbol	Formula	Definition	Uses
Mean	X	$\frac{\left(\sum_{i=1}^{\eta} x_i\right)}{n}$	Measure of central tendency	
Standard Deviation	S	$S_x = \left(\frac{n\Sigma\chi 2 - (\Sigma\chi)^2}{n(n-1)}\right)^{1/2}$	Measure of relative scatter of the data	
Relative Standard Deviation		$(S / \overline{X}) \times 100$	Relative standard deviation, adjusts for magnitude of observations	Used to assess precision for replicate results
Pooled RSD	RSD_p	$\left(\frac{\sum_{i=1}^{\eta}(RSDi)^2\ df\,i}{\sum_{i=1}^{\eta} dfi}\right)^{1/2}$	Measure of overall variability of a series	Used to assess overall performance for compounds with multiple measurements
Relative Percent Difference	RPD	$\left(\frac{(X_1 - X_2}{(X_1 + X_2)/2}\right) \times 100$	Measure of variability that adjusts for the magnitude of observations	Used when there are only two observations; mathematically related to RSD

Table A-3 Statistical Calculations

Statistical	Symbol	Formula	Definition	Uses
Average Relative Percent Difference	RPD	$\frac{\text{RPD}}{n}$	Average relative percent difference - analogous to pooled RSD for duplicate measurements	Used to assess overall performance for compounds with multiple measurements
Confidence Interval	CI	$\frac{X \pm t\langle \alpha, n-1 \rangle^{S}}{n^{1/2}}$	Interval about X that contains the true value, with probability α	Assign intervals or error bars to measurement data
Percent Recovery	R	$\left(\frac{X_{meas}}{X_{true}}\right) \text{ x } 100$	Recovery of spiked compound in pure matrix	Recovery of Quality Control check sample, method spikes
Percent Recovery	R	$\frac{\left(\begin{array}{c}\text{value of} \\ \text{spiked} \\ \text{sample}\end{array} - \begin{array}{c}\text{value of} \\ \text{unspiked} \\ \text{sample}\end{array}\right)}{\text{Value of added spike}} \times 100$	Recovery of spiked compound in sample matrix	Matrix spike and matrix spike/matrix spike duplicate recovery

X = Observation (concentration)
n = Number of observations
df = Degrees of freedom, usually
t = Statistical from students' "t" distribution

Table A-4. Field Quality Control Sample Collection Guidelines.

QC Sample	Description
Field Duplicate	One per matrix per 20 samples for each analysis.
Equipment Rinsate Blank	One per equipment set per 20 samples collected for each analysis. Only equipment sets that are dedicated or disposed of do not require equipment blanks.
Trip Blank	One per shipment for each cooler in which samples for volatile analysis are shipped. Trip blanks are analyzed for all volatile methods designated for the samples. Trip blanks are shipped for both solid and aqueous matrices.
Field Blank	One per 20 samples collected for each analysis if/when field conditions warrant evaluation of air borne contaminants. Collection decision by the Site Manager.

Field Analyses Data Quality Objectives

Parameter	Method	Precision	Accuracy % Recovery	Completeness %
pH	150.1	0.05 units	±0.2 units	95
Conductivity	120.1	7.6 umhos/cm	±2%	95
Temperature	--	0.1°C	±2°C	95

Calibration Frequency

Analysis	Initial Calibration	Calibration Check	Sample Duplicate
pH	Daily	Every 4 Hours	Daily
Conductivity	Daily	Every 4 Hours	Daily
Turbidity	Daily	Every 4 Hours	Daily

QA Quality Assurance
umhos/cm micromhos per centimeter

Table A-5. Summary of Methods, Containers, Preservatives, and Holding Times.

Parameter	Matrix	Preparation Method	Analytical Method [a]	Laboratory SOP	Container [b]	Preservative	Holding Time [c]
Organic and Metals Methods							
VOCs (TCL)	Water	5030, 5032	8260	L-1, L-17	3 x 40-mL vial with Teflon-lined septum	pH < 2 with HCl, Cool 4°C	14 days
	Water	5030, 5032	8260	L-1, L-17	3 x 40-mL vial with Teflon-lined septum	If effervescence is observed, eliminate HCl preservative and Cool 4°C	7 days
	Solid	5035	8260	L-17	Terracore Kit, 1x40mL no pres., 2X40mL with 5mL of water and stir bar, 1X40mL with 5mL methanol	Cool 4°C	14 days to analysis
	Soil Gas	NA	TO-15	L-12	1-L or 6-L Summa Canister	ambient	30 days
1,4-Dioxane	Water	5030, 5032	8260	L-1, L-17	3 x 40-mL vial with Teflon-lined septum	pH < 2 with HCl, Cool 4°C	14 days
SVOCs (TCL)	Water	3520 [d]	8270 (Low Level)	L-2, L-16	2 x 1-L amber G	Cool 4°C [e]	7 days to extraction and 40 days to analysis
	Solid	3550 [d]	8270 (Low Level)	L-2, L-13	1 x 4-oz or 8-oz G	Cool 4°C	14 days to extraction and 40 days to analysis
PAHs (TCL)	Water	3520 [d]	8270 SIM	L-2, L-16	2 x 1-L amber G	Cool 4°C [e]	7 days to extraction and 40 days to analysis
	Solid	3550 [d]	8270 SIM	L-2, L-13	2 x 1-L amber G	Cool 4°C [e]	7 days to extraction and 40 days to analysis

Table A-5. Summary of Methods, Containers, Preservatives, and Holding Times.

Parameter	Matrix	Preparation Method	Analytical Method [a]	Laboratory SOP	Container [b]	Preservative	Holding Time [c]
Organochlorine Pesticides (TCL)	Water	3520 [d]	8081/608	L-3, L-16	2 x 1-L amber G	Cool 4°C [e]	7 days to extraction and 40 days to analysis
	Solid	3550 [d]	8081	L-3, L-13	1 x 4-oz or 8-oz G	Cool 4°C	14 days to extraction and 40 days to analysis
Metals (except Mercury)	Water	3005	6010/6020	L-4/L-5, L-14	1 x 250mL HDPE	pH < 2 with HNO_3, Cool 4°C	6 months
	Solid	3050	6010	L-4, L-15	1 x 2-oz G	Cool 4°C	6 months
Mercury	Water	NA	7470	L-6	1 x 250mL HDPE	pH < 2 with HNO_3, Cool 4°C	28 days
	Solid	NA	7471	L-6	1 x 2-oz G	Cool 4°C	28 days
Chromium VI	Water	NA	7196	L-7	1 x 250-mL HDPE	Cool to <6°C	Cool to <6°C
	Solid	NA	7196	L-7	1 x 4-oz glass jar	Cool to <6°C	Cool to <6°C
Waste Characterization Parameters							
Ignitability	Aqueous Waste	NA	1010A	L-11	500 mL G	NA	NA
Organochlorine Pesticides (TCL)	Aqueous Waste	3520 [d]	608	L-3, L-16	2 x 1-L amber G	Cool 4°C [e]	7 days to extraction and 40 days to analysis
General Chemistry Parameters							
Methane, Ethane, Ethene	Water	RSK-175	RSK 175	L-10	2x40mL	HCl, Cool to <6°C	14 days

Table A-5. Summary of Methods, Containers, Preservatives, and Holding Times.

Parameter	Matrix	Preparation Method	Analytical Method [(a)]	Laboratory SOP	Container [(b)]	Preservative	Holding Time [(c)]
pH	Solid	NA	9045D	L-8	1 x4oz	Cool to <6°C	15 minutes
	Water	NA	4500	L-8	1 x 250-mL HDPE	Cool to <6°C	15 minutes
Total Organic Carbon (TOC)	Water	NA	415.2/9060	L-9	250 mL HDPE	pH < 2 with HCl or H_2SO_4, Cool 4°C	28 days

(a) The 8000 series methods will be used for assessment and remediation; the 600 series methods will be used only for wastewater.
(b) Sample volumes may be combined for parameters where preservatives are the same and adequate sample volume is supplied to the laboratory. Volumes listed are based on sample containers and not minimum volumes required for some of the General Chemistry Parameters listed. All other volumes are minimum volumes required to be submitted to the laboratory.
(c) Maximum holding time allowed from date of collection.
(d) Cleanup methods may be applicable if matrix interference is encountered. Cleanup methods may include alumina (Method 3610), florisil (Method 3620), silica gel (Method 3630), gel permeation chromatography (GPC) (Method 3640), and sulfur (Method 3660). Selection of appropriate method is based on nature of interference and target compounds.
(e) If residual chlorine is present, requires sodium thiosulfate in each sample container.
(f) Waste Characterization addresses solid (soils, drilling mud) material analysis for waste disposal purposes. Liquid (aqueous or organic) wastes will be characterized using the appropriate methods for determination of total constituent concentrations in accordance with waste disposal requirements under the Resource Conservation and Recovery Act (RCRA). TCLP analyses will be performed as required on wastes containing > 0.5% solids in accordance with RCRA waste characterization and disposal requirements.

°C – Degrees Centigrade
H_2SO_4 – Sulfuric acid
HCl – Hydrochloric acid
HDPE – High Density Polyethylene
HNO_3 – Nitric acid
L – Liter
mL – Milliliter
NA – Not Applicable
NaOH – Sodium hydroxide
PAHs – Polycyclic Aromatic Hydrocarbons
SVOCs – Semivolatile Organic Compounds
TCL – Target Compound List
VOCs – Volatile Organic Compounds

Table A-6. Laboratory Quality Control Sample Analysis Guidelines.

QC Sample	Description
Method Blank	One per matrix per preparation batch for each analysis.
Lab Replicate	One per matrix per preparation batch for each analysis.
Laboratory Control Sample/ Laboratory Control Sample Duplicate (LCS/LCSD)	One LCS per matrix per preparation batch for each analysis. LCSD performance is optional.
Surrogate Spiking	All samples analyzed for organic methods as method and Standard Operating Procedure (SOP) appropriate.
Matrix Spike/Matrix Spike Duplicate (MS/MSD)	One pair per matrix per preparation batch for each analysis. The spike solution will contain a broad range of the analytes of concern, but may not contain all due to incompatibility, interaction, breakdown, availability, or multi-component compounds. The overall frequency of MS/MSD on the project samples must be at least 1 set per 20 samples.

Figures

Figure A-2
Project Organization
Environmental Restoration PBA
Hunter Army Airfield
Georgia

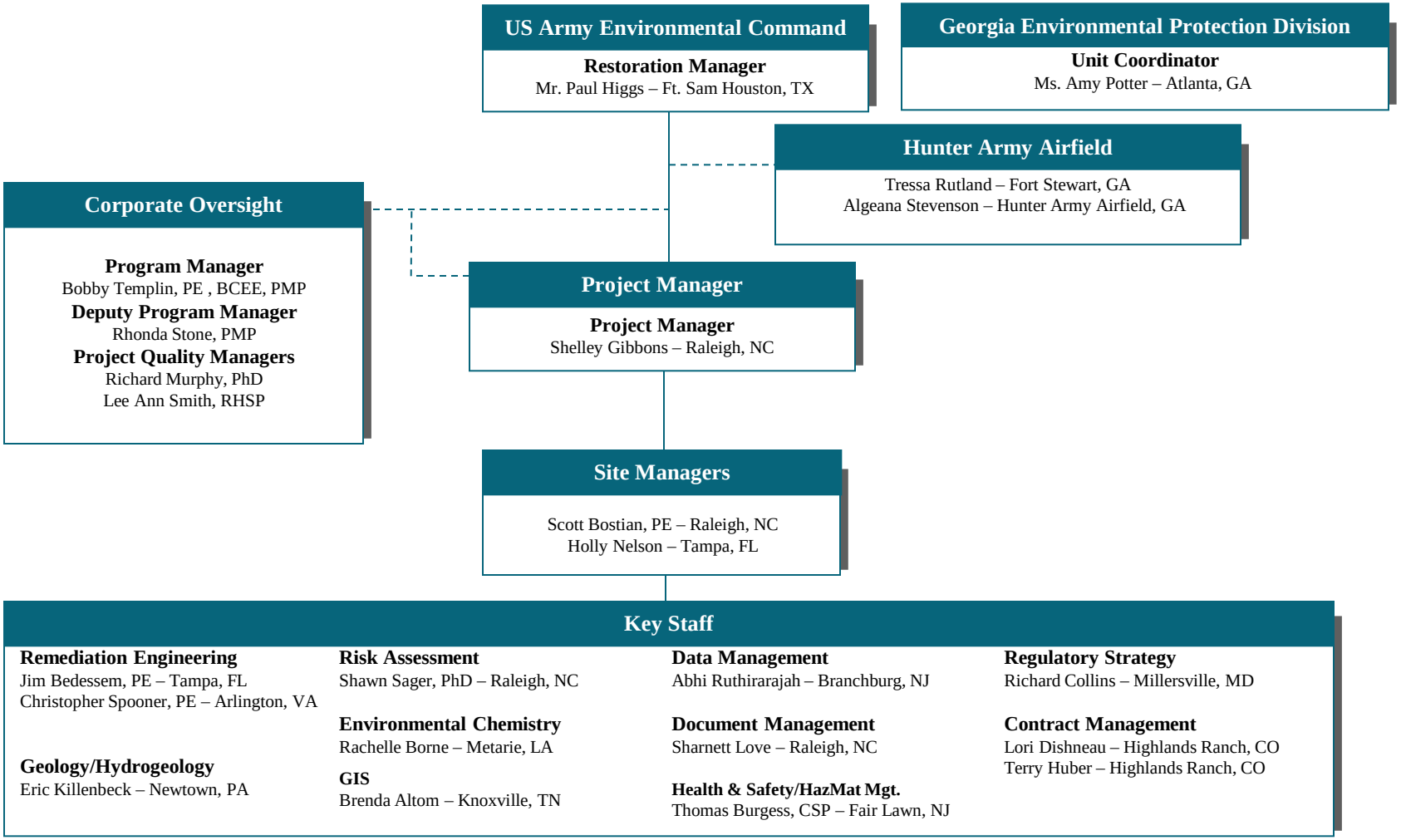

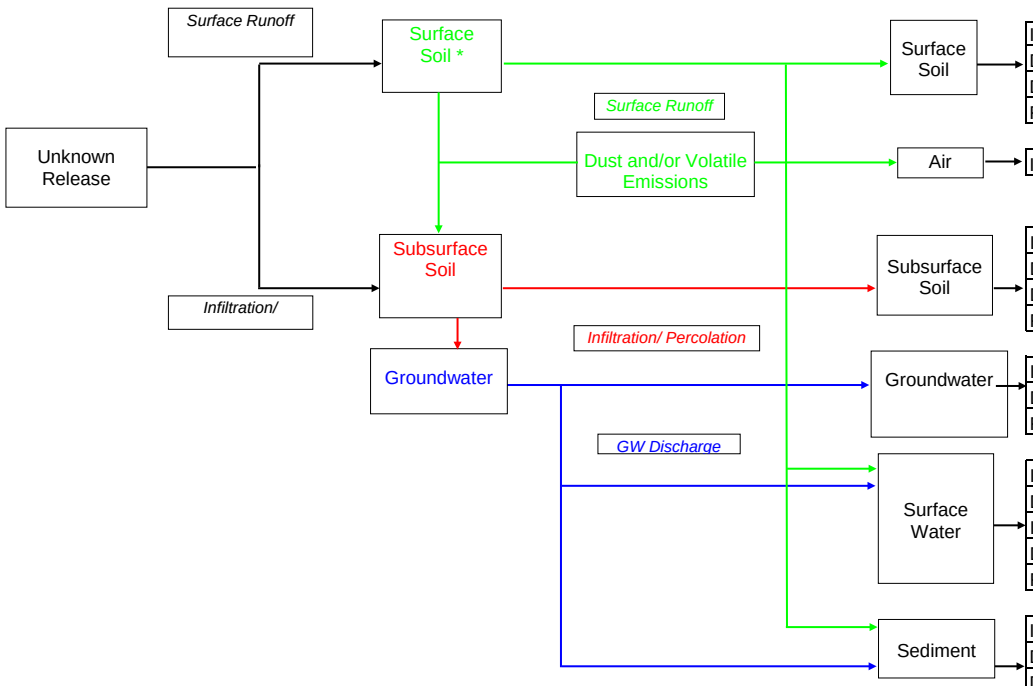

EXPOSURE ROUTE	Human Health				Ecological		
	Site Worker	Construction Worker	Hypothetical Futre Adult/Child Resident	Adolescent Trespasser	Terrestrial Wildlife	Soil Invertebrates	Terrestrial Plants
Surface Soil							
Ingestion	x	x	x	x	x	x	NA
Dermal Contact	x	x	x	x	x	x	NA
Direct Contact/Uptake	NA	NA	NA	x	x	x	x
Food Chain	NA	NA	NA	NA	x	NA	NA
Air							
Inhalation	x	x	x	x	NA	NA	NA
Subsurface Soil							
Ingestion	x	x	x	NA	NA	NA	NA
Dermal Contact	x	x	x	NA	NA	NA	NA
Direct Contact/Uptake	x	x	x	NA	NA	NA	NA
Food Chain	x	x	x	NA	NA	NA	NA
Groundwater							
Ingestion	NA	NA	NA	NA	NA	NA	NA
Direct Contact/Uptake	NA	NA	NA	NA	NA	NA	NA
Food Chain	NA	NA	NA	NA	NA	NA	NA
Surface Water							
Ingestion	NA	NA	NA	x	NA	NA	NA
Dermal Contact	NA	NA	NA	x	NA	NA	NA
Inhalation of vapors	NA	NA	NA	x	NA	NA	NA
Direct Contact/Uptake	NA	NA	NA	NA	NA	NA	NA
Food Chain	NA	NA	NA	NA	NA	NA	NA
Sediment							
Ingestion	NA	NA	NA	x	NA	NA	NA
Dermal Contact	NA	NA	NA	x	NA	NA	NA
Direct Contact/Uptake	NA	NA	NA	NA	NA	NA	NA
Food Chain	NA	NA	NA	NA	NA	NA	NA

* Surface soil is defined as soil in the top 1 foot of the soil column for human receptors and in the top 3 feet of the soil column for ecological receptors.

NA Pathway not applicable.
x Potential pathway.

ARCADIS

Conceptual Site Model for Potential Human and Ecological Receptors
HAA-01 (Former Fire Training Area and DAACG Chlorinated Solvent Area)
Hunter Army Airfield - Savannah, Georgia

Figure A-4

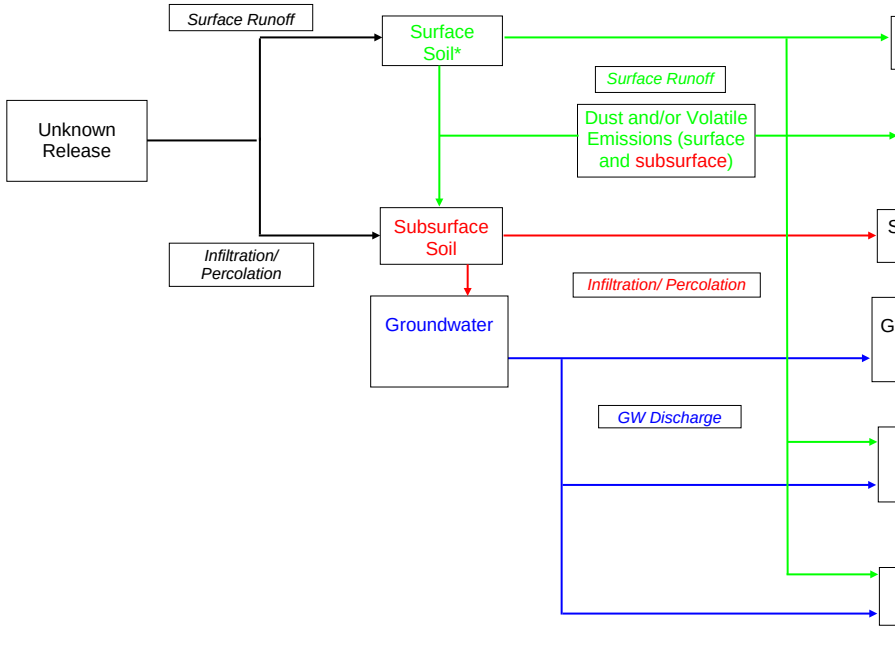

EXPOSURE ROUTE	Site Worker	Construction Worker	Hypothetical Future Adult and Child Resident	Adolescent Trespasser
Surface Soil: Ingestion	x	x	x	x
Surface Soil: Dermal Contact	x	x	x	x
Air: Inhalation	x	x	x	x
Subsurface Soil: Ingestion	x	x	x	NA
Subsurface Soil: Dermal Contact	x	x	x	NA
Groundwater: Ingestion	x	NA	x	NA
Groundwater: Dermal Contact	x	NA	x	NA
Groundwater: Inhalation	x	NA	x	NA
Surface Water: Ingestion	x	NA	x	x
Surface Water: Dermal Contact	x	NA	x	x
Surface Water: Inhalation	x	NA	x	x
Sediment: Ingestion	x	NA	x	x
Sediment: Dermal Contact	x	NA	x	x
Sediment: Inhalation	x	NA	x	x

* Surface soil is defined as soil in the top 1 foot of the soil column for human receptors.

NA Pathway not applicable.
x Potential pathway.

ARCADIS

Conceptual Site Model for Potential Human Receptors
HAA-15 (MCA Barracks Site)
Hunter Army Airfield - Savannah, Georgia

Figure A-8

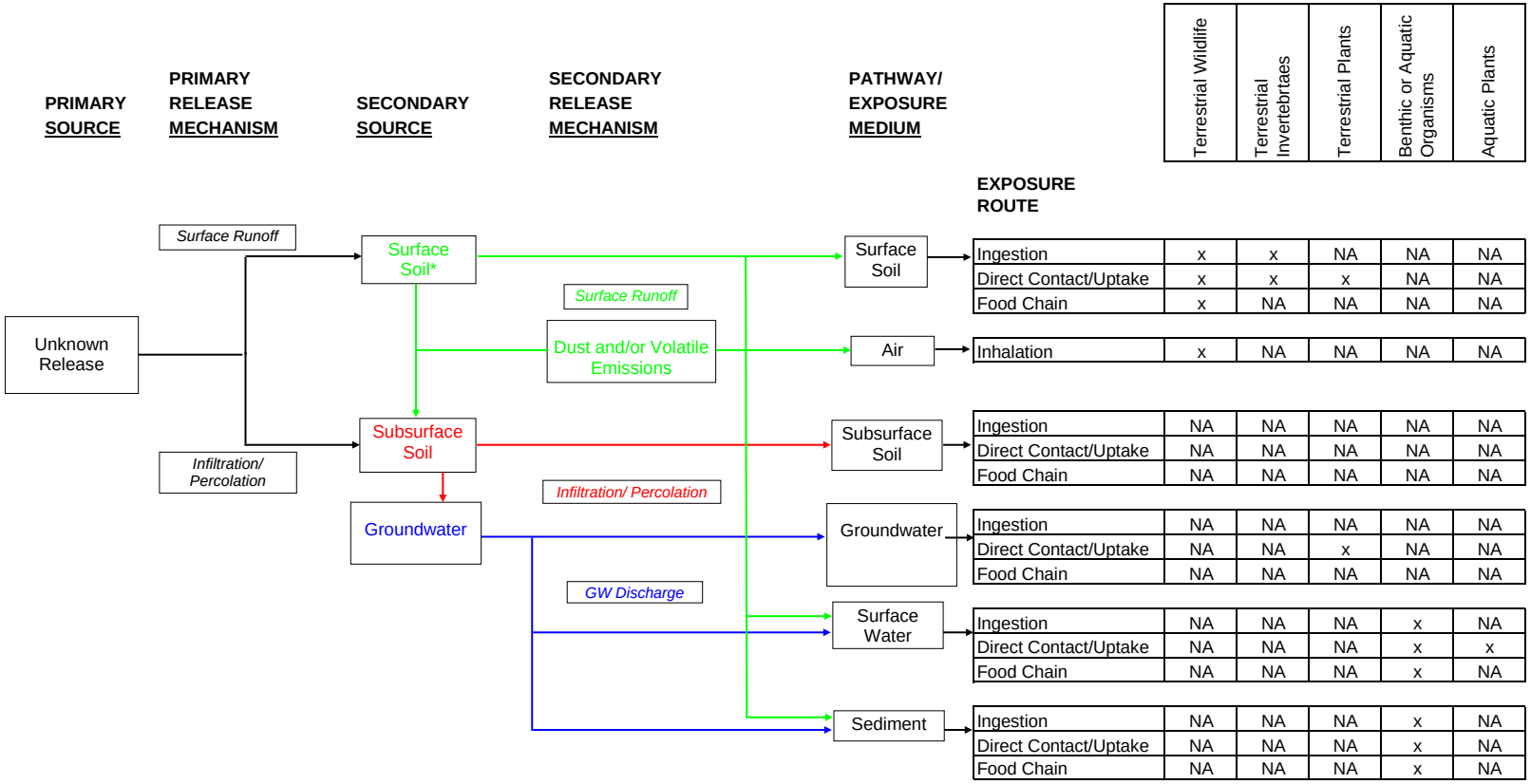

EXPOSURE ROUTE	Terrestrial Wildlife	Terrestrial Invertebrtaes	Terrestrial Plants	Benthic or Aquatic Organisms	Aquatic Plants
Surface Soil: Ingestion	x	x	NA	NA	NA
Surface Soil: Direct Contact/Uptake	x	x	x	NA	NA
Surface Soil: Food Chain	x	NA	NA	NA	NA
Air: Inhalation	x	NA	NA	NA	NA
Subsurface Soil: Ingestion	NA	NA	NA	NA	NA
Subsurface Soil: Direct Contact/Uptake	NA	NA	NA	NA	NA
Subsurface Soil: Food Chain	NA	NA	NA	NA	NA
Groundwater: Ingestion	NA	NA	NA	NA	NA
Groundwater: Direct Contact/Uptake	NA	NA	x	NA	NA
Groundwater: Food Chain	NA	NA	NA	NA	NA
Surface Water: Ingestion	NA	NA	NA	x	NA
Surface Water: Direct Contact/Uptake	NA	NA	NA	x	x
Surface Water: Food Chain	NA	NA	NA	x	NA
Sediment: Ingestion	NA	NA	NA	x	NA
Sediment: Direct Contact/Uptake	NA	NA	NA	x	NA
Sediment: Food Chain	NA	NA	NA	x	NA

* Surface soil is defined as soil in the top 3 feet of the soil column for ecological receptors.

NA Pathway not applicable.
x Potential pathway.

ARCADIS

Conceptual Site Model for Potential Ecological Receptors
HAA-15 (MCA Barracks Site)
Hunter Army Airfield - Savannah, Georgia

Figure A-9

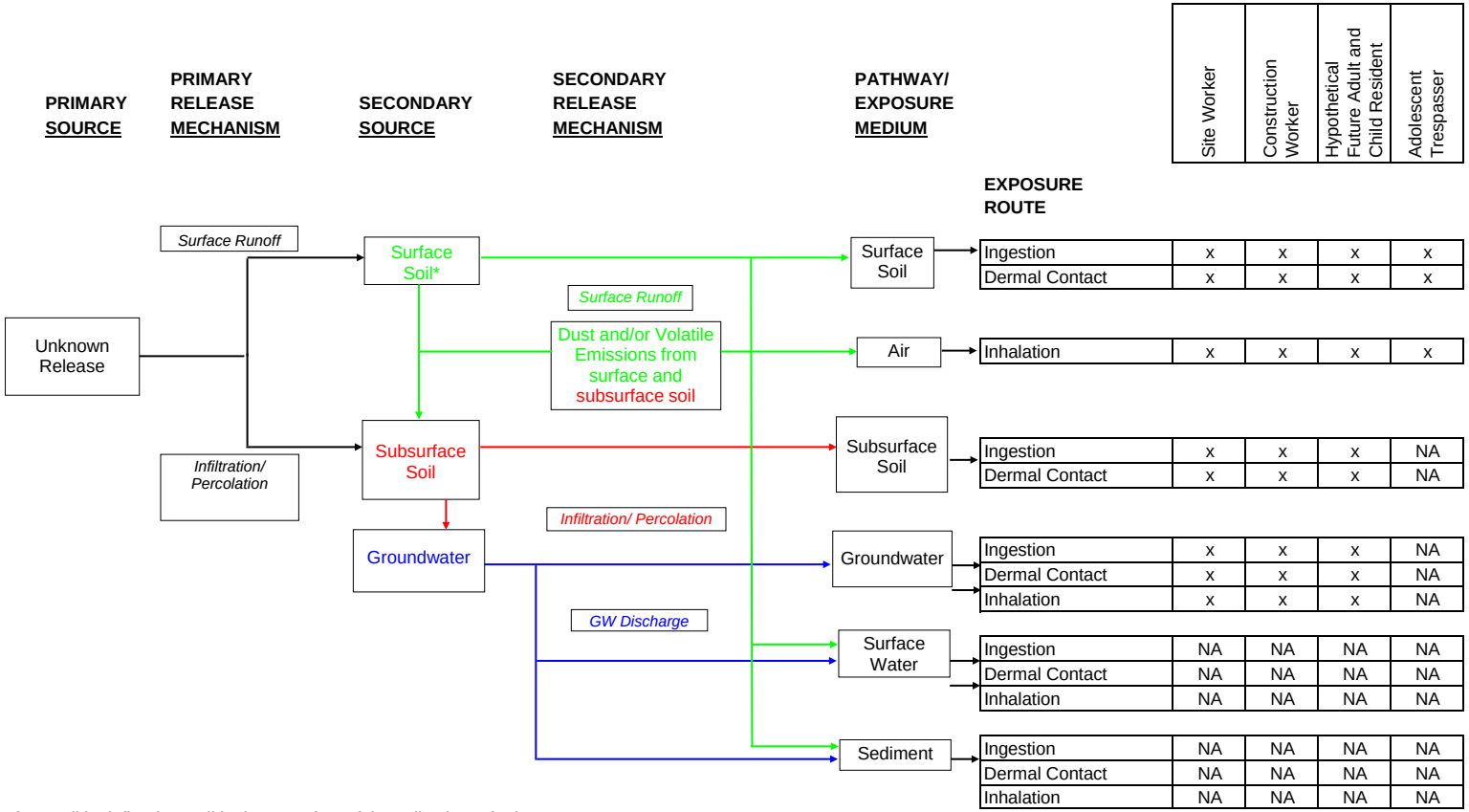

* Surface soil is defined as soil in the top 1 foot of the soil column for human receptors.

NA Pathway not applicable; there are no surface water features at HAA-17.
x Potential pathway.

ARCADIS

Conceptual Site Model for Potential Human Receptors
HAA-17 – Former USTs 25 and 26, Purge Facility and Building 12907
Hunter Army Airfield - Savannah, Georgia

Figure A-11

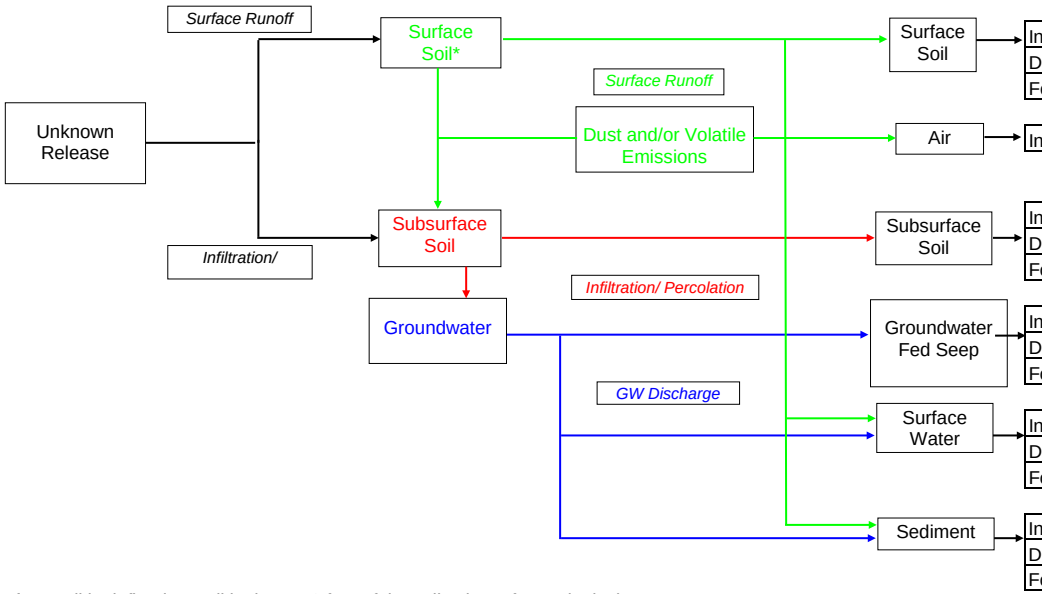

EXPOSURE ROUTE	Terrestrial Wildlife	Terrestrial Plants	Soil Invertebrates
Ingestion	x	NA	x
Direct Contact/Uptake	x	x	x
Food Chain	x	NA	NA
Inhalation	NA	NA	NA
Ingestion	NA	NA	NA
Direct Contact/Uptake	NA	NA	NA
Food Chain	NA	NA	NA
Ingestion	NA	NA	NA
Direct Contact/Uptake	NA	NA	NA
Food Chain	NA	NA	NA
Ingestion	NA	NA	NA
Direct Contact/Uptake	NA	NA	NA
Food Chain	NA	NA	NA
Ingestion	NA	NA	NA
Direct Contact/Uptake	NA	NA	NA
Food Chain	NA	NA	NA

* Surface soil is defined as soil in the top 3 feet of the soil column for ecological receptors.

NA Pathway not applicable.
x Potential pathway.

ARCADIS

Conceptual Site Model for Potential Ecological Receptors
HAA-17 – Former USTs 25 and 26, Purge Facility and Building 12907
Hunter Army Airfield - Savannah, Georgia

Figure A-12

Attachments

Attachment A-1. Project Personnel Sign-Off Sheet

Project Personnel	Organization/Title	Signature or Email Confirmation	UFP-QAPP Section Reviewed	Date UFP-QAPP Read
Shelley Gibbons	PIKA-ARCADIS JV Project Manager			
Scott Bostian	PIKA-ARCADIS JV Site Manager			
Holly Nelson	PIKA-ARCADIS JV Site Manager			
TBD	ARCADIS/Field Team Leader			
Nisreen Saikaly	Shealy Environmental Services/Laboratory Supervisor	Email confirmation		

Attachment A-2. Project Scoping Session Participants Sheet

Project Name:
Site Name:
Site Location:
Projected Date(s) of Fieldwork:
Site Managers:
Date of Scoping Session:
Scoping Session Purpose:

Attendance Date(s)	Name	Initials Used for Meeting Minutes	Affiliation	Phone #	Email Address	Project Role

Comments/Decisions:

Attachment A-3 Reference Limits and Evaluation Table
Matrix: Surface Water
Analtyical Laboratory: Shealy Environmental, Inc.

				Achievable Laboraotry Limits			Control Limits			Screening Levels	
Method	Analyte	CAS Number	Unit	PQL	LOD	MDL	Accuracy (% Recovery)		Precision (%RPD)	ISWQS	USEPA R4 Eco
8260B	Acetone	67-64-1	ug/L	20	15	6.7	40	140	20		
8260B	Benzene	71-43-2	ug/L	1	0.4	0.131	80	120	20	51	53
8260B	Bromodichloromethane	75-27-4	ug/L	1	0.4	0.33	75	120	20	17	-
8260B	Bromoform	75-25-2	ug/L	1	0.8	0.661	70	130	20	140	293
8260B	Bromomethane (Methyl bromide)	74-83-9	ug/L	2	1.6	0.8	30	145	20	1500	-
8260B	2-Butanone (MEK)	78-93-3	ug/L	10	3.5	2.026	30	150	20	-	-
8260B	Carbon disulfide	75-15-0	ug/L	1	0.2	0.097	35	160	20	-	-
8260B	Carbon tetrachloride	56-23-5	ug/L	1	0.2	0.137	65	140	20	1.6	352
8260B	Chlorobenzene	108-90-7	ug/L	1	0.6	0.33	80	120	20	1600	195
8260B	Chloroethane	75-00-3	ug/L	2	1	0.47	60	135	20	-	-
8260B	Chloroform	67-66-3	ug/L	1	0.6	0.33	65	135	20	470	289
8260B	Chloromethane (Methyl chloride)	74-87-3	ug/L	1	0.6	0.351	40	125	20	(a)	5500
8260B	Cyclohexane	110-82-7	ug/L	1	0.8	0.3	70	130	20	-	-
8260B	1,2-Dibromo-3-chloropropane (DBCP)	96-12-8	ug/L	1	0.8	0.6	50	130	20	-	-
8260B	Dibromochloromethane	124-48-1	ug/L	1	0.6	0.33	60	135	20	13	-
8260B	1,2-Dibromoethane (EDB)	106-93-4	ug/L	1	0.6	0.3	80	120	20	-	-
8260B	1,2-Dichlorobenzene	95-50-1	ug/L	1	0.6	0.33	70	120	20	1300	15.8
8260B	1,3-Dichlorobenzene	541-73-1	ug/L	1	0.6	0.33	75	125	20	960	50.2
8260B	1,4-Dichlorobenzene	106-46-7	ug/L	1	0.6	0.33	75	125	20	190	11.2
8260B	Dichlorodifluoromethane	75-71-8	ug/L	2	0.6	0.2	30	155	20	-	-
8260B	1,1-Dichloroethane	75-34-3	ug/L	1	0.2	0.128	70	135	20	-	303
8260B	1,2-Dichloroethane	107-06-2	ug/L	1	0.2	0.147	70	130	20	37	2000
8260B	1,1-Dichloroethene	75-35-4	ug/L	1	0.2	0.158	70	130	20	7100	-
8260B	cis-1,2-Dichloroethene	156-59-2	ug/L	1	0.2	0.121	70	125	20	-	-
8260B	trans-1,2-Dichloroethene	156-60-5	ug/L	1	0.4	0.206	60	140	20	10000	-
8260B	1,2-Dichloropropane	78-87-5	ug/L	1	0.2	0.189	75	125	20	15	525
8260B	cis-1,3-Dichloropropene	10061-01-5	ug/L	1	0.2	0.092	70	130	20	-	-
8260B	trans-1,3-Dichloropropene	10061-02-6	ug/L	1	0.2	0.105	55	140	20	-	-
8260B	Ethylbenzene	100-41-4	ug/L	1	0.6	0.33	75	125	20	2100	453
8260B	2-Hexanone	591-78-6	ug/L	10	0.4	0.274	55	130	20	-	-
8260B	Isopropylbenzene	98-82-8	ug/L	1	0.04	0.03	75	125	20	-	-
8260B	Methyl acetate	79-20-9	ug/L	1	0.8	0.3	15	128	20	-	-
8260B	Methyl tertiary butyl ether (MTBE)	1634-04-4	ug/L	1	0.8	0.4	65	125	20	-	-
8260B	4-Methyl-2-pentanone	108-10-1	ug/L	10	0.8	0.312	60	135	20	-	-
8260B	Methylcyclohexane	108-87-2	ug/L	5	3.5	0.95	70	130	20	-	-
8260B	Methylene chloride	75-09-2	ug/L	1	0.6	0.33	55	140	20	590	1930
8260B	Styrene	100-42-5	ug/L	1	0.4	0.121	65	135	20	-	-
8260B	1,1,2,2-Tetrachloroethane	79-34-5	ug/L	1	0.4	0.163	65	130	20	4	240
8260B	Tetrachloroethene	127-18-4	ug/L	1	0.4	0.132	45	150	20	3.3	-
8260B	Toluene	108-88-3	ug/L	1	0.6	0.33	75	120	20	5980	175
8260B	1,1,2-Trichloro-1,2,2-Trifluoroethane	76-13-1	ug/L	1	0.8	0.3	70	130	20	-	-
8260B	1,2,4-Trichlorobenzene	120-82-1	ug/L	1	0.8	0.51	65	135	20	70	44.9
8260B	1,1,1-Trichloroethane	71-55-6	ug/L	1	0.2	0.074	65	130	20	-	528
8260B	1,1,2-Trichloroethane	79-00-5	ug/L	1	0.4	0.21	75	125	20	16	940
8260B	Trichloroethene	79-01-6	ug/L	1	0.4	0.18	70	125	20	30	-
8260B	Trichlorofluoromethane	75-69-4	ug/L	1	0.6	0.3	60	145	20	-	-

Attachment A-3 Reference Limits and Evaluation Table
Matrix: Surface Water
Analtyical Laboratory: Shealy Environmental, Inc.

				Achievable Laboraotry Limits			Control Limits			Screening Levels	
Method	Analyte	CAS Number	Unit	PQL	LOD	MDL	Accuracy (% Recovery)		Precision (%RPD)	ISWQS	USEPA R4 Eco
8260B	Vinyl chloride	75-01-4	ug/L	1	0.2	0.054	50	145	20	2.4	-
8260B	Xylenes (total)	1330-20-7	ug/L	1	0.4	0.33	70	130	20	-	-
8260B	1,4-Dioxane	123-91-1	ug/L	5	3.4	1.7	70	130	20	-	-
8270D	Acenaphthene	83-32-9	ug/L	1	0.2	0.09	51	130	40	990	17
8270D	Acenaphthylene	208-96-8	ug/L	1	0.2	0.16	46	131	40	(a)	-
8270D	Acetophenone	98-86-2	ug/L	1	0.41	0.32	30	130	40	-	-
8270D	Anthracene	120-12-7	ug/L	1	0.2	0.13	48	122	40	40000	-
8270D	Atrazine	1912-24-9	ug/L	1	0.4	0.2	30	130	40	-	-
8270D	Benzaldehyde	100-52-7	ug/L	5	2	1	30	130	40	-	-
8270D	Benzo(a)anthracene	56-55-3	ug/L	1	0.2	0.15	50	143	40	0.018	-
8270D	Benzo(a)pyrene	50-32-8	ug/L	1	0.2	0.16	55	141	40	0.018	-
8270D	Benzo(b)fluoranthene	205-99-2	ug/L	1	0.4	0.2	48	147	40	0.018	-
8270D	Benzo(g,h,i)perylene	191-24-2	ug/L	1	0.4	0.23	48	139	40	(a)	-
8270D	Benzo(k)fluoranthene	207-08-9	ug/L	1	0.2	0.12	48	148	40	0.018	-
8270D	1,1'-Biphenyl	92-52-4	ug/L	1	0.4	0.2	30	130	40	-	-
8270D	4-Bromophenyl phenyl ether	101-55-3	ug/L	1	0.2	0.12	49	123	40	-	-
8270D	Butyl benzyl phthalate	85-68-7	ug/L	5	2	1.7	52	142	40	1900	22
8270D	Caprolactam	105-60-2	ug/L	5	2	1.21	30	130	40	-	-
8270D	Carbazole	86-74-8	ug/L	1	0.5	0.25	45	101	40	-	-
8270D	4-Chloro-3-methyl phenol	59-50-7	ug/L	1	0.5	0.22	48	136	40	(a)	-
8270D	4-Chloroaniline	106-47-8	ug/L	1	0.41	0.13	18	73	40	-	-
8270D	bis(2-Chloroethoxy)methane	111-91-1	ug/L	1	0.2	0.13	46	130	40	-	-
8270D	bis(2-Chloroethyl)ether	111-44-4	ug/L	1	0.41	0.13	42	127	40	0.53	2380
8270D	bis(2-Chloroisopropyl)ether	108-60-1	ug/L	1	0.2	0.08	36	133	40	65000	-
8270D	2-Chloronaphthalene	91-58-7	ug/L	1	0.2	0.12	42	132	40	1600	-
8270D	2-Chlorophenol	95-57-8	ug/L	1	0.2	0.13	40	128	40	150	43.8
8270D	4-Chlorophenyl phenyl ether	7005-72-3	ug/L	1	0.2	0.11	34	124	40	-	-
8270D	Chrysene	218-01-9	ug/L	1	0.2	0.12	51	137	40	0.018	-
8270D	Dibenzo(a,h)anthracene	53-70-3	ug/L	1	0.2	0.13	48	139	40	0.018	-
8270D	Dibenzofuran	132-64-9	ug/L	1	0.2	0.16	45	142	40	-	-
8270D	3,3'-Dichlorobenzidine	91-94-1	ug/L	5	0.82	0.81	10	124	40	0.028	-
8270D	2,4-Dichlorophenol	120-83-2	ug/L	1	0.41	0.15	38	127	40	290	36.5
8270D	Diethylphthalate	84-66-2	ug/L	5	2.5	1.7	48	124	40	44000	521
8270D	Dimethyl phthalate	131-11-3	ug/L	5	2.5	1.7	43	122	40	1100000	-
8270D	2,4-Dimethylphenol	105-67-9	ug/L	1	0.41	0.31	36	110	40	850	-
8270D	Di-n-butyl phthalate	84-74-2	ug/L	5	2.5	1.7	50	134	40	4500	-
8270D	4,6-Dinitro-2-methylphenol	534-52-1	ug/L	5	2.5	1.48	46	151	40	280	2.3
8270D	2,4-Dinitrophenol	51-28-5	ug/L	5	0.5	0.25	33	143	40	5300	6.2
8270D	2,4-Dinitrotoluene	121-14-2	ug/L	2	1	0.45	55	137	40	3.4	310
8270D	2,6-Dinitrotoluene	606-20-2	ug/L	2	0.8	0.4	53	128	40	-	-
8270D	Di-n-octylphthalate	117-84-0	ug/L	5	2	1.7	50	136	40	-	-
8270D	bis(2-Ethylhexyl)phthalate	117-81-7	ug/L	5	2	1.7	40	141	40	2.2	<0.3
8270D	Fluoranthene	206-44-0	ug/L	1	0.4	0.21	50	124	40	140	39.8
8270D	Fluorene	86-73-7	ug/L	1	0.2	0.1	39	122	40	5300	-
8270D	Hexachlorobenzene	118-74-1	ug/L	1	0.4	0.21	46	125	40	0.00029	-
8270D	Hexachlorobutadiene	87-68-3	ug/L	1	0.2	0.09	38	121	40	18	0.93
8270D	Hexachlorocyclopentadiene	77-47-4	ug/L	5	0.5	0.23	24	110	40	1100	0.07

Attachment A-3 Reference Limits and Evaluation Table
Matrix: Surface Water
Analtyical Laboratory: Shealy Environmental, Inc.

				Achievable Laboraotry Limits			Control Limits			Screening Levels	
Method	Analyte	CAS Number	Unit	PQL	LOD	MDL	Accuracy (% Recovery)		Precision (%RPD)	ISWQS	USEPA R4 Eco
8270D	Hexachloroethane	67-72-1	ug/L	1	0.41	0.11	32	109	40	3.3	9.8
8270D	Indeno(1,2,3-c,d)pyrene	193-39-5	ug/L	1	0.4	0.23	49	146	40	0.018	-
8270D	Isophorone	78-59-1	ug/L	1	0.41	0.08	43	118	40	960	1170
8270D	2-Methylnaphthalene	91-57-6	ug/L	1	0.2	0.08	40	132	40	-	-
8270D	2-Methylphenol	95-48-7	ug/L	1	0.41	0.17	33	122	40	-	-
8270D	3 & 4-Methylphenol	106-44-5	ug/L	2	0.82	0.57	48	112	40	-	-
8270D	Naphthalene	91-20-3	ug/L	1	0.2	0.07	45	118	40	-	62
8270D	2-Nitroaniline	88-74-4	ug/L	2	1	0.55	48	126	40	-	-
8270D	3-Nitroaniline	99-09-2	ug/L	2	1	0.77	29	109	40	-	-
8270D	4-Nitroaniline	100-01-6	ug/L	2	0.4	0.39	42	154	40	-	-
8270D	Nitrobenzene	98-95-3	ug/L	1	0.41	0.1	46	131	40	690	270
8270D	2-Nitrophenol	88-75-5	ug/L	2	0.4	0.27	44	131	40	-	3500
8270D	4-Nitrophenol	100-02-7	ug/L	5	1	0.64	43	145	40	-	82.8
8270D	N-Nitrosodi-n-propylamine	621-64-7	ug/L	1	0.2	0.08	46	135	40	0.51	-
8270D	N-Nitrosodiphenylamine (Diphenylamine)	86-30-6	ug/L	1	0.41	0.38	44	124	40	6	58.5
8270D	Pentachlorophenol	87-86-5	ug/L	5	1	0.54	30	137	40	3	13
8270D	Phenanthrene	85-01-8	ug/L	1	0.2	0.18	49	122	40	(a)	-
8270D	Phenol	108-95-2	ug/L	1	0.41	0.11	35	118	40	300	256
8270D	Pyrene	129-00-0	ug/L	1	0.2	0.16	50	130	40	4000	-
8270D	2,4,5-Trichlorophenol	95-95-4	ug/L	1	0.41	0.18	46	125	40	-	-
8270D	2,4,6-Trichlorophenol	88-06-2	ug/L	1	0.41	0.22	36	123	40	2.4	3.2
8081B	Aldrin	309-00-2	ug/L	0.025	0.004	0.0017	70	130	30	0.00005	0.3
8081B	gamma-BHC (Lindane)	58-89-9	ug/L	0.025	0.004	0.0011	70	130	30	0.95	0.08
8081B	alpha-BHC	319-84-6	ug/L	0.025	0.004	0.001	70	130	30	0.0049	500
8081B	beta-BHC	319-85-7	ug/L	0.025	0.004	0.0039	70	130	30	0.017	5000
8081B	delta-BHC	319-86-8	ug/L	0.025	0.004	0.0011	70	130	30		-
8081B	alpha-Chlordane	5103-71-9	ug/L	0.025	0.004	0.0013	70	130	30		0.0043
8081B	gamma-Chlordane	5103-74-2	ug/L	0.025	0.004	0.0015	70	130	30		0.0043
8081B	4,4'-DDD	72-54-8	ug/L	0.025	0.004	0.001	70	130	30	0.00031	0.0064
8081B	4,4'-DDE	72-55-9	ug/L	0.025	0.02	0.011	70	130	30	0.00022	10.5
8081B	4,4'-DDT	50-29-3	ug/L	0.025	0.004	0.002	70	130	30	0.00022	0.001
8081B	Dieldrin	60-57-1	ug/L	0.025	0.004	0.001	70	130	30	0.000054	0.0019
8081B	Endosulfan I	959-98-8	ug/L	0.025	0.004	0.0022	70	130	30	0.056	-
8081B	Endosulfan II	33213-65-9	ug/L	0.025	0.004	0.0015	70	130	30	0.056	-
8081B	Endosulfan sulfate	1031-07-8	ug/L	0.025	0.004	0.0011	70	130	30	89	-
8081B	Endrin	72-20-8	ug/L	0.025	0.004	0.001	70	130	30	0.036	0.0023
8081B	Endrin aldehyde	7421-93-4	ug/L	0.025	0.004	0.0019	70	130	30	0.3	-
8081B	Endrin ketone	53494-70-5	ug/L	0.025	0.004	0.0012	70	130	30	-	-
8081B	Heptachlor	76-44-8	ug/L	0.025	0.02	0.013	70	130	30	0.000079	0.0038
8081B	Heptachlor epoxide	1024-57-3	ug/L	0.025	0.004	0.002	70	130	30	0.000039	0.0038
8081B	Methoxychlor	72-43-5	ug/L	0.1	0.004	0.002	70	130	30	0.03	0.03
8081B	Toxaphene	8001-35-2	ug/L	0.25	0.2	0.11	70	130	30	0.0002	0.0002
6020A	Arsenic	7440-38-2	ug/L	1	0.5	0.261	80	120	20	50	190
6020A	Barium	7440-39-3	ug/L	5	0.1	0.045	80	120	20	-	-
6020A	Cadmium	7440-43-9	ug/L	0.1	0.06	0.059	80	120	20	0.15	0.66

Attachment A-3 Reference Limits and Evaluation Table
Matrix: Surface Water
Analtyical Laboratory: Shealy Environmental, Inc.

				Achievable Laboraotry Limits			Control Limits			Screening Levels	
Method	Analyte	CAS Number	Unit	PQL	LOD	MDL	Accuracy (% Recovery)		Precision (%RPD)	ISWQS	USEPA R4 Eco
6020A	Chromium	7440-47-3	ug/L	5	0.5	0.346	80	120	20	-	117.32
6020A	Lead	7439-92-1	ug/L	1	0.1	0.047	80	120	20	1.2	1.32
6020A	Selenium	7782-49-2	ug/L	1	0.5	0.253	80	120	20	5	5
6020A	Silver	7440-22-4	ug/L	1	0.02	0.011	80	120	20	(a)	0.012
6010C	Arsenic	7440-38-2	ug/L	10	5	3	80	120	20	50	190
6010C	Barium	7440-39-3	ug/L	25	12.5	8	80	120	20	-	-
6010C	Cadmium	7440-43-9	ug/L	2	1	0.6	80	120	20	0.15	0.66
6010C	Chromium	7440-47-3	ug/L	5	2.5	1.6	80	120	20	-	117.32
6010C	Lead	7439-92-1	ug/L	10	5	3	80	120	20	1.2	1.32
6010C	Selenium	7782-49-2	ug/L	10	5	3	80	120	20	5	5
6010C	Silver	7440-22-4	ug/L	5	2.5	1.6	80	120	20	(a)	0.012
7470A	Mercury	7439-97-6	ug/L	0.1	0.05	0.015	82	119	20	0.012	0.012
7196A	Hexavalent Chromium	18540-29-9	ug/L	20	10	8.1	90	110	20	11	11
RSK - 175	Ethane	74-84-0	ug/L	10	3.17	1.519	70	130	30	-	-
RSK - 175	Ethene	74-85-1	ug/L	10	2.96	1.163	70	130	30	-	-
RSK - 175	Methane	74-82-8	ug/L	10	3.64	2.287	70	130	30	-	-
9060A	TOC	SESI-0027	ug/L	1000	100	62.7	90	110	20	-	-
1010A	Ignitability	SESI-0058	° F	140	0	0	90	110	0	-	-
4500	pH	SESI-0033	su	0	0	0	90	110	20	-	-

Screening levels are presented for purposes of comparison to laboratory limits. Applicable screening levels will be selected based on site characteristics, including types of receptors and potential exposure scenarios.
PQL - Practical Quantitation Limit
LOD - Limit of Detection
MDL - Method Detection Limit
ISWQS - Georgia's Water Quality Standards per Chapter 391-3-6-.03 of the Rules and Regulations for Water Quality Control. http://epd.georgia.gov/existing-rules-and-corresponding-laws.
USEPAR4 Eco - USEPA. 2001. Supplemental Guidance to RAGS: Region 4 Bulletins, Ecological Risk Assessment. Originally published November 1995. Website version last updated November 30, 2001: http://www.epa.gov/region4/superfund/programs/riskassess/ecolbul.html
(a) - Addressed in 391-3-6-.06

Attachment A-4. Project Sampling SOP References Table

Reference Number	Title, Revision Date and / or Number	Originating Organization of Sampling SOP	Modified for Project Work? (Y/N)
F-01	Chain of Custody, Handling, Packaging and Shipping, Rev. 2, March 6, 2009	ARCADIS U.S., Inc. (ARCADIS)	N
F-02	Soil Drilling and Sample Collection, Rev.2, March 8, 2011	ARCADIS	N
F-03	Soil Description, Rev. 0, May 20, 2008	ARCADIS	N
F-04	Surface and Subsurface Soil Sampling Using Manual Methods, Rev. 1, March 6, 2009	ARCADIS	N
F-05	Extraction/Preservation of Soil/Sediment for Volatile Organic Compounds (VOCs), Rev. 1, April 9, 2008	ARCADIS	N
F-06	Surface Water Sampling from Surface Water Body, Rev. 0, August 30, 2012	ARCADIS	N
F-07	Sediment Sampling, Rev. 0, July 29, 2003	ARCADIS	N
F-08	Groundwater Sampling Using Hydropunch, Rev. 1, March 3, 2009	ARCADIS	N
F-09	Monitoring Well Installation, Rev. 3, February 2, 2011	ARCADIS	N
F-10	Monitoring Well Development, Rev. 2.2, March 2, 2010	ARCADIS	N
F-11	Well Development – Water Jetting, Rev. 1, July 2, 2010	ARCADIS	N

Reference Number	Title, Revision Date and / or Number	Originating Organization of Sampling SOP	Modified for Project Work? (Y/N)
F-12	Monitoring Well Integrity Survey, Rev. 0, February 24, 2009	ARCADIS	N
F-13	Monitoring Well Decommissioning, Rev. 0, July 25, 2010	ARCADIS	N
F-14	Injection Well Design and Installation, Rev. 1, July 20, 2010	ARCADIS	N
F-15	Water-Level and NAPL Thickness Measurement Procedures, Rev. 0, February 27, 2009	ARCADIS	N
F-16	Standard Groundwater Sampling for Monitoring Wells, Rev. 1, July 16, 2008	ARCADIS	N
F-17	Low-Flow Groundwater Purging and Sampling for Monitoring Wells, Rev. 4, February 2, 2011	ARCADIS	N
F-18	Groundwater Sampling with HydraSleeves™, Rev. 2, February 2011	ARCADIS	N
F-19	Photoionization Detector Air Monitoring and Field Screening, Rev. 1, November 8, 2009	ARCADIS	N
F-20	Flame Ionization Detector Air Monitoring and Field Screening, Rev. 1, July 25, 2003	ARCADIS	N
F-21	Multiple Gas Air Monitoring and Field Screening, Rev. 0, July 20, 2003	ARCADIS	N
F-22	Manual In-Situ Hydraulic Conductivity Test Procedures, Rev. 1, March 17, 2004	ARCADIS	N

Reference Number	Title, Revision Date and / or Number	Originating Organization of Sampling SOP	Modified for Project Work? (Y/N)
F-23	In-Situ Chemical Oxidation, Rev. 2, July 27, 2010	ARCADIS	N
F-24	Anaerobic Microbial In-Situ Reactive Zone, Injection, Operation, and Monitoring Health and Safety Standard Operating Procedure, Rev. 0, February 3, 2006	ARCADIS	N
F-25	Down-Hole Groundwater Field Parameter Measurement, Rev. 0, March 10, 2009	ARCADIS	N
F-26	Field Equipment Decontamination, Rev. 3, April 26, 2010	ARCADIS	N
F-27	Investigative-Derived Waste Handling and Storage, Rev. 2, March 6, 2009	ARCADIS	N
F-28	Disposal Procedure for ISCO Derived Solid and Liquid Wastes, Rev. 1, August 5, 2011	ARCADIS	N
F-29	Utility Locating using Radio Frequency Methods, Rev. 0, November 2010	ARCADIS	N
F-30	Ground Penetrating Radar, Rev. 2, May 2009	ARCADIS	N
F-31	Hazardous Weather Procedures, Rev. 1, March 16, 2009	ARCADIS	N
F-32	Small Volume Injection Test, Rev. 01, October 2012	ARCADIS	N

Attachment A-5. Analytical SOP References Table

Reference Number	Analytical or Preparation Method	Title, Revision Date, and/or Number	Definitive or Screening	Analytical Group	Instrument	Organization Performing Analysis	Modified for Project Work?[1] (Y/N)
L-1	8260	GC/MS Volatiles Analysis based on EPA Methods 8260B,624, and Standard Method 6200B-2011, S-VO-002, 19 01/31/14	Definitive	VOCs (Solid and Water)	GC	Shealy Environmental Services	No
L-2	8270	GC/MS Analysis Based on EPA Method 8270 and 625 Prepared by EPA Methods 3520C, 3550C and 3580A, S-SV-021, Rev. 13, 12/10/13	Definitive	SVOCs (Solid and Water)	GC/MS	Shealy Environmental Services	No
L-3	8081/608	Gas Chromatographic Analysis Based on EPA 608 and SW-846, Method 8000B, 8081B, and 8082A rev 17 06/30/14	Definitive	Organochlorine Pesticides (Solid and Water)	GC	Shealy Environmental Services	No
L-4	6010	Inductively Coupled Plasma – Atomic Emission Spectroscopy – Spectrometric Method for Trace Element Analyses Method 6010C, S-IM-022, Rev 6, 10/08/14	Definitive	Metals (Solid and Water)	ICP-AES	Shealy Environmental Services	No
L-5	6020	Inductively Coupled Plasma – Mass Spectrometry Analysis Method 6020A, S-IM-021, Rev 6, 07/21/14	Definitive	Metals (Solid and Water)	ICP-MS	Shealy Environmental Services	No
L-6	7470/7471	Mercury analysis by Cold Vapor Atomic Absorption Method 245.1/7470A and Method 245.5/7471A/B, S-IM-006, Rev 13, 05/23/14	Definitive	Mercury (Solid and Water)	CVAA	Shealy Environmental Services	No

Attachment A-5. Analytical SOP References Table

Reference Number	Analytical or Preparation Method	Title, Revision Date, and/or Number	Definitive or Screening	Analytical Group	Instrument	Organization Performing Analysis	Modified for Project Work?[1] (Y/N)
L-7	7196	Heavalent Chromium by Colorimetric Spectrophotometry Using Discrete and Manual Analysis SM 3500-CR B-2011 and SW-846 Prep Method 3060A with Analysis Method 7196A, S-IN-047, Rev 11, 01/17/14	Definitive	Hexavalent Chromium (Solid and Water)	UV Spectrophotometer	Shealy Environmental Services	No
L-8	9045D/4500	pH by Electrometric Measurement Standard Method 4500-H= B-2011 and SW-846 904B/C and pH Paper Method SW-846/9041A and EPA9045C/D, S-IN-016, Rev 12, 03/10/14	Definitive	pH (Solid and Water)	pH meter	Shealy Environmental Services	No
L-9	9060	Total Organic Carbon (TOC) Standard Method 5310C-2011 and SW-846 9060A, S-IN-008, Rev 10, 01/17/14	Definitive	Total Organic Carbon (Water)	NA	Shealy Environmental Services	No
L-10	RSK175	RSK-175 S-VO-012 rev 0 01/15/14	Definitive	Methane, Ethane, Ethene (Water)	GC-FID	Shealy Environmental Services	No
L-11	1010A	Ignitability (Flashpoint)S-IN-038 rev 10, 01/16/14	Definitive	Ignitability (Aqueous Waste)	Pensky Martin	Shealy Environmental Services	No
L-12	TO-15	Determination of Volatile Organic Compounds in Air Samples Collected in Specially Prepared Canisters and Gas Collection Bags by Gas Chromatography/Mass Spectrometry (GC/MS), Rev. 20	Definitive	VOCs (Air)	GC/MS	ALS Environmental - Simi Valley, CA	No

Attachment A-5. Analytical SOP References Table

Reference Number	Analytical or Preparation Method	Title, Revision Date, and/or Number	Definitive or Screening	Analytical Group	Instrument	Organization Performing Analysis	Modified for Project Work?[1] (Y/N)
L-13	3550	Ultrasonic Extraction Method 3550B/C, S-EX-017, Rev6, 04/29/14	Preparation	Preparation (Solid)	NA	Shealy Environmental Services	No
L-14	3005	Aqueous Digestion of Aqueous Samples for Total Recoverable Metal Analysis by ICP and ICP-MS Spectroscopy by Method 200.7/ 3005A S-IM-008, Rev10, 04/07/14	Preparation	Preparation (Solid and Water)	NA	Shealy Environmental Services	No
L-15	3050	Acid Digestion of Sediments, Sludges and Soils, Method 3050B, S-IM-013, Rev 9, 01/16/14	Preparation	Preparation (Solid)	NA	Shealy Environmental Services	No
L-16	3520	Continuous Liquid-Liquid Extraction Method 3520C, S-EX-003, Rev.14, 06/30/14	Preparation	Preparation (Water)	NA	Shealy Environmental Services	No
L-17	5030, 5032	GC/MS Volatiles Analysis based on EPA Methods 8260B,624, and Standard Method 6200B-2011, S-VO-002, 19 01/31/14	Preparation	Preparation (Solid and Water)	NA	Shealy Environmental Services	No

AES Atomic Emission Spectroscopy
DOC Dissolved Organic Carbon
CVAA Cold Vapor Atomic Absorption
GC Gas Chromatography
ICP Inductively-Coupled Plasma
MS Mass Spectroscopy
NA not applicable
TDS Total Dissolved Solids
TSS Total Suspended Solids
TOC total organic carbon

Appendix B

Field Standard Operating Procedures (SOPs)

Table of Contents

SOP F-01	**Chain-of-Custody, Handling, Packing, and Shipping**
SOP F-02	**Soil Drilling and Sample Collection**
SOP F-03	**Soil Description**
SOP F-04	**Surface and Subsurface Soil Sampling Using Manual Methods**
SOP F-05	**Extraction/Preservation of Soil Sediment for VOCs**
SOP F-06	**Surface Water Sampling from Surface Water Body**
SOP F-07	**Sediment Sampling**
SOP F-08	**Groundwater Sampling Using HydroPunch™**
SOP F-09	**Monitoring Well Installation**
SOP F-10	**Monitoring Well Development**
SOP F-11	**Well Development – Water Jetting**
SOP F-12	**Monitoring Well Integrity Survey**
SOP F-13	**Monitoring Well Decommissioning**
SOP F-14	**Injection Well Design and Installation**
SOP F-15	**Water-Level and NAPL Thickness Measurement**
SOP F-16	**Standard Groundwater Sampling for Monitoring Wells**
SOP F-17	**Low-Flow Groundwater Purging and Sampling Procedures for Monitoring Wells**
SOP F-18	**Groundwater Sampling with HydraSleeves™**
SOP F-19	**Photoionization Detector Air Monitoring and Field Screening**

Appendix B – Field SOPs

SOP F-20	**Flame Ionization Detector Air Monitoring and Field Screening**
SOP F-21	**Multiple Gas Air Monitoring and Field Screening**
SOP F-22	**Manual In-Situ Hydraulic Conductivity Test Procedures**
SOP F-23	**In-Situ Chemical Oxidation**
SOP F-24	**Anaerobic Microbial In-Situ Reactive Zone Injection, Operation, and Monitoring**
SOP F-25	**Down-Hole Groundwater Field Parameter Measurement**
SOP F-26	**Field Equipment Decontamination**
SOP F-27	**Investigation-Derived Waste Handling and Storage**
SOP F-28	**Disposal Procedure for ISCO-Derived Solid and Liquid Wastes**
SOP F-29	**Utility Locating using Radio Frequency Methods**
SOP F-30	**Ground Penetrating Radar**
SOP F-31	**Hazardous Weather Procedures**
SOP F-32	**Small Volume Injection Test**

F-01

Chain-of-Custody, Handling, Packing, and Shipping

ARCADIS
Infrastructure · Water · Environment · Buildings

Imagine the result

Chain-of-Custody, Handling, Packing and Shipping

Rev. #: 2

Rev Date: March 6, 2009

I. Scope and Application

This Standard Operating Procedure (SOP) describes the chain-of-custody, handling, packing, and shipping procedures for the management of samples to decrease the potential for cross-contamination, tampering, mis-identification, and breakage, and to insure that samples are maintained in a controlled environment from the time of collection until receipt by the analytical laboratory.

II. Personnel Qualifications

ARCADIS field sampling personnel will have current health and safety training, including 40-hour HAZWOPER training, Department of Transportation (DOT) training, site supervisor training, and site-specific training, as needed. In addition, ARCADIS field sampling personnel will be versed in the relevant SOPs and possess the skills and experience necessary to successfully complete the desired field work.

III. Equipment List

The following list provides materials that may be required for each project. Project documents and sample collection requirements should be reviewed prior to initiating field operations:

- indelible ink pens (black or blue);
- polyethylene bags (resealable-type);
- clear packing tape, strapping tape, duct tape;
- chain of custody
- DOT shipping forms, as applicable
- custody seals or tape;
- appropriate sample containers and labels,;
- insulated coolers of adequate size for samples and sufficient ice to maintain 4°C during collection and transfer of samples;
- wet ice;
- cushioning and absorbent material (i.e., bubble wrap or bags);

- temperature blank
- sample return shipping papers and addresses; and
- field notebook.

IV. Cautions

Review project requirements and select appropriate supplies prior to field mobilization.

Insure that appropriate sample containers with applicable preservatives, coolers, and packing material have been supplied by the laboratory.

Understand the offsite transfer requirements for the facility at which samples are collected.

If overnight courier service is required schedule pick-up or know where the drop-off service center is located and the hours of operation. Prior to using air transportation, confirm air shipment is acceptable under DOT and International Air Transport Association (IATA) regulation

Schedule pick-up time for laboratory courier or know location of laboratory/service center and hours of operation.

Understand DOT and IATA shipping requirements and evaluate dangerous goods shipping regulations relative to the samples being collected (i.e. complete an ARCADIS shipping determination). Review the ARCADIS SOPs for shipping, packaging and labeling of dangerous goods. Potential samples requiring compliance with this DOT regulation include:

- Methanol preservation for Volatile Organic Compounds in soil samples
- Non-aqueous phase liquids (NAPL)

V. Health and Safety Considerations

Follow health and safety procedures outlined in the project/site Health and Safety Plan (HASP).

Use caution and appropriate cut resistant gloves when tightening lids to 40 mL vials. These vials can break while tightening and can lacerate hand. Amber vials (thinner glass) are more prone to breakage.

Some sample containers contain preservatives.

- The preservatives must be retained in the sample container and should in no instance be rinsed out.
- Preservatives may be corrosive and standard care should be exercised to reduce potential contact to personnel skin or clothing. Follow project safety procedures if spillage is observed.
- If sample container caps are broken discard the bottle. Do not use for sample collection.

VI. Procedure

Chain-of-Custody Procedures

1. Prior to collecting samples, complete the chain-of-custody record header information by filling in the project number, project name, and the name(s) of the sampling technician(s) and other relevant project information. Attachment 1 provides an example chain-o- custody record

2. Chain-of-custody information MUST be printed legibly using indelible ink (black or blue).

3. After sample collection, enter the individual sample information on the chain-of-custody:

    a. Sample Identification indicates the well number or soil location that the sample was collected from. Appropriate values for this field include well locations, grid points, or soil boring identification numbers (e.g., MW-3, X-20, SB-30). When the depth interval is included, the complete sample ID would be “SB-30 (0.5-1.0) where the depth interval is in feet. Please note it is very important that the use of hyphens in sample names and depth units (i.e., feet or inches) remain consistent for all samples entered on the chain-of-custody form. DO NOT use the apostrophe or quotes in the sample ID. Sample names may also use the abbreviations “FB,” “TB,” and “DUP” as prefixes or suffixes to indicate that the sample is a field blank, trip blank, or field duplicate, respectively. NOTE: The sample

nomenclature may be dictated by the project database and require unique identification for each sample collected for the project. Consult the project data management plan for additional information regarding sample identification.

b. List the date of sample collection. The date format to be followed should be mm/dd/yy (e.g., 03/07/09) or mm/dd/yyyy (e.g. 03/07/2009).

c. List the time that the sample was collected. The time value should be presented using military format. For example, 3:15 P.M. should be entered as 15:15.

d. The composite field should be checked if the sample is a composite over a period of time or from several different locations and mixed prior to placing in sample containers.

e. The “Grab”. field should be marked with an “X” if the sample was collected as an individual grab sample. (e.g. monitoring well sample or soil interval).

f. Any sample preservation should be noted.

g. The analytical parameters that the samples are being analyzed for should be written legibly on the diagonal lines. As much detail as possible should be presented to allow the analytical laboratory to properly analyze the samples. For example, polychlorinated biphenyl (PCB) analyses may be represented by entering “PCBs” or “Method 8082.” Multiple methods and/or analytical parameters may be combined for each column (e.g., PCBs/VOCs/SVOCs or 8082/8260/8270). These columns should also be used to present project-specific parameter lists (e.g., Appendix IX+3 target analyte list. Each sample that requires a particular parameter analysis will be identified by placing the number of containers in the appropriate analytical parameter column. For metals in particular, indicate which metals are required.

h. Number of containers for each method requested. This information may be included under the parameter or as a total for the sample based on the chain of custody form used.

i. Note which samples should be used for site specific matrix spikes.

j. Indicate any special project requirements.

k. Indicate turnaround time required.

l. Provide contact name and phone number in the event that problems are encountered when samples are received at the laboratory.

m. If available attach the Laboratory Task Order or Work Authorization forms

n. The remarks field should be used to communicate special analytical requirements to the laboratory. These requirements may be on a per sample basis such as “extract and hold sample until notified,” or may be used to inform the laboratory of special reporting requirements for the entire sample delivery group (SDG). Reporting requirements that should be specified in the remarks column include: 1) turnaround time; 2) contact and address where data reports should be sent; 3) name of laboratory project manager; and 4) type of sample preservation used.

o. The “Relinquished By” field should contain the signature of the sampling technician who relinquished custody of the samples to the shipping courier or the analytical laboratory.

p. The “Date” field following the signature block indicates the date the samples were relinquished. The date format should be mm/dd/yyyy (e.g., 03/07/2005).

q. The “Time” field following the signature block indicates the time that the samples were relinquished. The time value should be presented using military format. For example, 3:15 P.M. should be entered as 15:15.

r. The “Received By” section is signed by sample courier or laboratory representative who received the samples from the sampling technician or it is signed upon laboratory receipt from the overnight courier service.

3. Complete as many chain-of-custody forms as necessary to properly document the collection and transfer of the samples to the analytical laboratory.

4. Upon completing the chain-of-custody forms, forward two copies to the analytical laboratory and retain one copy for the field records.

5. If electronic chain-of-custody forms are utilized, sign the form and make 1 copy for ARCADIS internal records and forward the original with the samples to the laboratory.

Handling Procedures

1. After completing the sample collection procedures, record the following information in the field notebook with indelible ink:

   - project number and site name;
   - sample identification code and other sample identification information, if appropriate;
   - sampling method;
   - date;
   - name of sampler(s);
   - time;
   - location (project reference);
   - location of field duplicates and both sample identifications;
   - locations that field QC samples were collected including equipment blanks, field blanks and additional sample volume for matrix spikes; and
   - any comments.

2. Complete the sample label with the following information in indelible ink:

   - sample type (e.g., surface water);
   - sample identification code and other sample identification information, if applicable;
   - analysis required;
   - date;
   - time sampled; and
   - initials of sampling personnel;

- sample matrix; and
- preservative added, if applicable.

3. Cover the label with clear packing tape to secure the label onto the container and to protect the label from liquid.

4. Confirm that all caps on the sample containers are secure and tightly closed.

5. In some instances it may be necessary to wrap the sample container cap with clear packing tape to prevent it from becoming loose.

6. For some projects individual custody seals may be required. Custody seal evidence tape may be placed on the shipping container or they may be placed on each sample container such that the cooler or cap cannot be opened without breaking the custody seal. The custody seal should be initialed and dated prior to relinquishing the samples.

Packing Procedures

Following collection, samples must be placed on wet ice to initiate cooling to 4°C immediately. Retain samples on ice until ready to pack for shipment to the laboratory.

1. Secure the outside and inside of the drain plug at the bottom of the cooler being used for sample transport with “Duct” tape.

2. Place a new large heavy duty plastic garbage bag inside each cooler

3. Place each sample bottle wrapped in bubble wrap inside the garbage bag. VOC vials may be grouped by sample in individual resealable plastic bags). A cooler temperature blank supplied by the laboratory should be packaged following the same procedures as the samples and should accompany each sample cooler containing samples that require ice preservation. Place 1 to 2 inches of cushioning material (e.g., vermiculite) at the bottom of the cooler.

4. Place the sealed sample containers upright in the cooler.

5. Package ice in large resealable plastic bags and place inside the large garbage bag in the cooler. Samples placed on ice will be cooled to and maintained at a temperature of approximately 4°C.

6. Fill the remaining space in the cooler with cushioning material such as bubble wrap. The cooler must be securely packed and cushioned in an upright position and be surrounded (Note: to comply with 49 CFR 173.4, filled cooler must not exceed 64 pounds).

7. Place the completed chain-of-custody record(s) in a large resealable bag and tape the bag to the inside of the cooler lid.

8. Close the lid of the cooler and fasten with packing tape.

9. Wrap strapping tape around both ends of the cooler.

10. Mark the cooler on the outside with the following information: shipping address, return address, “Fragile, Handle with Care” labels on the top and on one side, and arrows indicating “This Side Up” on two adjacent sides.

11. Place custody seal evidence tape over front right and back left of the cooler lid, initial and date, then cover with clear plastic tape.

Note: Procedure numbers 2, 3, 5, and 6 may be modified in cases where laboratories provide customized shipping coolers. These cooler types are designed so the sample bottles and ice packs fit snugly within preformed styrofoam cushioning and insulating packing material.

Shipping Procedures

1. All samples will be delivered by an express carrier within 48 hours of sample collection. Alternatively, samples may be delivered directly to the laboratory or laboratory service center or a laboratory courier may be used for sample pickup.

2. If parameters with short holding times are required (e.g., VOCs [EnCore™ Sampler], nitrate, nitrite, ortho-phosphate and BOD), sampling personnel will take precautions to ship or deliver samples to the laboratory so that the holding times will not be exceeded.

3. Samples must be maintained at 4°C±2°C until shipment and through receipt at the laboratory

4. All shipments must be in accordance with DOT regulations and ARCADIS dangerous goods shipping SOPs.

5. When the samples are received by the laboratory, laboratory personnel will complete the chain-of-custody by recording the date and time of receipt of samples, measuring and recording the internal temperature of the shipping container, and checking the sample identification numbers on the containers to ensure they correspond with the chain-of-custody forms.

Any deviations between the chain-of-custody and the sample containers, broken containers, or temperature excursions will be communicated to ARCADIS immediately by the laboratory.

VII. Waste Management

Not applicable

VIII. Data Recording and Management

Chain-of-custody records will be transmitted to the ARCADIS PM or designee at the end of each day unless otherwise directed by the ARCADIS PM. The sampling team leader retains copies of the chain-of-custody forms for filing in . the project file. Record retention shall be in accordance with project requirements.

IX. Quality Assurance

Chain-of-custody forms will be legibly completed in accordance with the applicable project documents such as Sampling and Analysis Plan (SAP), Quality Assurance Project Plan (QAPP), Work Plan, or other project guidance documents. A copy of the completed chain-of-custody form will be sent to the ARCADIS Project Manager or designee for review.

X. References

Not Applicable

Attachment 1

ARCADIS
Infrastructure, environment, facilities

ID#:

CHAIN OF CUSTODY & LABORATORY ANALYSIS REQUEST FORM

Page ___ of ___

Lab Work Order #

Send Results to:

Contact & Company Name: | Telephone:

Address: | Fax:

City | State | Zip | E-mail Address:

Project Name/Location (City, State): | Project #:

Sampler's Printed Name: | Sampler's Signature:

Preservative							
Filtered (✓)							
# of Containers							
Container Information							

PARAMETER ANALYSIS & METHOD

Keys

Preservation Key:
A. H_2SO_4
B. HCL
C. HNO_3
D. NaOH
E. None
F. Other: _____
G. Other: _____
H. Other: _____

Container Information Key:
1. 40 ml Vial
2. 1 L Amber
3. 250 ml Plastic
4. 500 ml Plastic
5. Encore
6. 2 oz. Glass
7. 4 oz. Glass
8. 8 oz. Glass
9. Other: _____
10. Other: _____

Matrix Key:
SO - Soil | SE - Sediment | NL - NAPL/Oil
W - Water | SL - Sludge | SW - Sample Wipe
T - Tissue | A - Air | Other: _____

Sample ID	Collection Date	Collection Time	Type (✓) Comp	Type (✓) Grab	Matrix								REMARKS

Special Instructions/Comments:

☐ **Special QA/QC Instructions(✓):**

Laboratory Information and Receipt		Relinquished By	Received By	Relinquished By	Laboratory Received By
Lab Name:	Cooler Custody Seal (✓)	Printed Name:	Printed Name:	Printed Name:	Printed Name:
☐ Cooler packed with ice (✓)	☐ Intact ☐ Not Intact	Signature:	Signature:	Signature:	Signature:
Specify Turnaround Requirements:	Sample Receipt:	Firm:	Firm/Courier:	Firm/Courier:	Firm:
Shipping Tracking #:	Condition/Cooler Temp: _____	Date/Time:	Date/Time:	Date/Time:	Date/Time:

20030826 CofC AR Form 01.12.2007

Distribution: **WHITE – Laboratory returns with results** **YELLOW – Lab copy** **PINK – Retained by BBL**

F-02

Soil Drilling and Sample Collection

ARCADIS
Infrastructure, environment, buildings

Imagine the result

Soil Drilling and Sample Collection

Rev. #: 3

Rev Date: February 22, 2013

I. Scope and Application

Overburden drilling is commonly performed using the hollow-stem auger drilling method. Other drilling methods suitable for overburden drilling, which are sometimes necessary due to site-specific geologic conditions, include: drive-and-wash, spun casing, Rotasonic, dual-rotary (Barber Rig), and fluid/mud rotary. Direct-push techniques (e.g., Geoprobe or cone penetrometer) may also be used. The drilling method to be used at a given site will be selected based on site-specific consideration of anticipated drilling depths, site or regional geologic knowledge, types of sampling to be conducted, required sample quality and volume, and cost.

No oils or grease will be used on equipment introduced into the boring (e.g., drill rod, casing, or sampling tools).

II. Personnel Qualifications

The Project Manager (a qualified geologist, environmental scientist, or engineer) will identify the appropriate soil boring locations, depth and soil sample intervals in a written plan.

Personnel responsible for overseeing drilling operations must have at least 16 hours of prior training overseeing drilling activities with an experienced geologist, environmental scientist, or engineer with at least 2 years of prior experience.

III. Equipment List

The following materials will be available during soil boring and sampling activities, as required:

- Site Plan with proposed soil boring/well locations;
- Work Plan or Field Sampling Plan (FSP), and site Health and Safety Plan (HASP);
- personal protective equipment (PPE), as required by the HASP;

- drilling equipment required by the American Society for Testing and Materials (ASTM) D 1586, when performing split-spoon sampling;
- disposable plastic liners, when drilling with direct-push equipment;
- appropriate soil sampling equipment (e.g., stainless steel spatulas, knife);
- equipment cleaning materials;
- appropriate sample containers and labels;
- chain-of-custody forms;
- insulated coolers with ice, when collecting samples requiring preservation by chilling;
- photoionization detector (PID) or flame ionization detector (FID); and
- field notebook and/or personal digital assistant (PDA).

IV. Cautions

Prior to beginning field work, underground utilities in the vicinity of the drilling areas will be identified by one of the following three actions (lines of evidence):

- Contact the State One Call
- Obtain a detailed site utility plan drawn to scale, preferably an “as-built” plan
- Conduct a detailed visual site inspection

In the event that one or more of the above lines of evidence cannot be conducted, or if the accuracy of utility location is questionable, a minimum of one additional line of evidence will be utilized as appropriate or suitable to the conditions. Examples of additional lines of evidence include but are not limited to:

- Private utility locating service
- Research of state, county or municipal utility records and maps including computer drawn maps or geographical information systems (GIS)
- Contact with the utility provider to obtain their utility location records

- Hand augering or digging
- Hydro-knife
- Air-knife
- Radio Frequency Detector (RFD)
- Ground Penetrating Radar (GPR)
- Any other method that may give ample evidence of the presence or location of subgrade utilities.

Overhead power lines also present risks and the following safe clearance must be maintained from them.

Power Line Voltage Phase to Phase (kV)	**Minimum Safe Clearance (feet)**
50 or below	10
Above 50 to 200	15
Above 200 to 350	20
Above 350 to 500	25
Above 500 to 750	35
Above 750 to 1,000	35

ANSI Standard B30.5-1994, 5-3.4.5

Avoid using drilling fluids or materials that could impact groundwater or soil quality, or could be incompatible with the subsurface conditions.

Water used for drilling and sampling of soil or bedrock, decontamination of drilling/sampling equipment, or grouting boreholes upon completion will be of a quality acceptable for project objectives. Testing of water supply should be considered.

Specifications of materials used for backfilling borehole will be obtained, reviewed and approved to meet project quality objectives.

V. Health and Safety Considerations

Field activities associated with overburden drilling and soil sampling will be performed in accordance with a site-specific HASP, a copy of which will be present on site during such activities.

VI. Procedure

Drilling Procedures

The drilling contractor will be responsible for obtaining accurate and representative samples; informing the supervising geologist of changes in drilling pressure; and keeping a separate general log of soils encountered, including blow counts (i.e., the number of blows from a soil sampling drive weight [140 pounds] required to drive the split-barrel sampler in 6-inch increments). The term “samples” means soil materials from particular depth intervals, whether or not portions of these materials are submitted for laboratory analysis. Records will also be kept of occurrences of premature refusal due to boulders or construction materials that may have been used as fill. Where a boring cannot be advanced to the desired depth, the boring will be abandoned and an additional boring will be advanced at an adjacent location to obtain the required sample. Multiple refusals may lead to a decision by the supervising geologist to abandon that sampling location. All soil borings shall be abandoned (filled, sealed, and plugged) within 30 days of completion using cement and/or bentonite grout.

Soil Characterization Procedures

Soils encountered while drilling soil borings will be collected using one of the following methods:

- 2-inch split-barrel (split-spoon) sampler, if using the ASTM D 1586 - Standard Test Method for Penetration Test and Split-Barrel Sampling of Soils
- Plastic internal soil sample sleeves if using direct-push drilling.

Soils are typically field screened with an FID or PID at sites where volatile organic compounds are present in the subsurface. Field screening is performed using one of the following methods:

- Upon opening the sampler, the soil is split open and the PID or FID probe is placed in the opening and covered with a gloved hand. Such readings should be obtained at several locations along the length of the sample

- A portion of the collected soil is placed in a jar, which is covered with aluminum foil, sealed, and allowed to warm to room temperature. After warming, the cover is removed, the foil is pieced with the FID or PID probe, and a reading is obtained.

Samples selected for laboratory analysis will be handled, packed, and shipped in accordance with the procedures outlined in the Work Plan, FSP, or Chain-of-Custody, Handling, Packing, and Shipping SOP.

A geologist will be onsite during drilling and sampling operations to describe each soil interval on the soil boring log, including:

- percent recovery;
- structure and degree of sample disturbance;
- soil type;
- color;
- moisture condition;
- density;
- grain-size;
- consistency; and
- other observations, particularly relating to the presence of waste materials

Further details regarding geologic description of soils are presented in the Soil Description SOP.

Particular care will be taken to fully describe any sheens observed, oil saturation, staining, discoloration, evidence of chemical impacts, or unnatural materials.

VII. Waste Management

Water generated during cleaning procedures will be collected and contained onsite in appropriate containers for future analysis and appropriate disposal.

PPE (such as gloves, disposable clothing, and other disposable equipment) resulting from personnel cleaning procedures and soil sampling/handling activities will be placed in plastic bags. These bags will be transferred into appropriately labeled 55-gallon drums or a covered roll-off box for appropriate disposal.

Soil materials will be placed in sealed 55-gallon steel drums or covered roll-off boxes and stored in a secured area. Once full, the material will be analyzed to determine the appropriate disposal method.

VIII. Data Recording and Management

The supervising geologist or scientist will be responsible for documenting drilling events using a bound field notebook and/or PDA to record all relevant information in a clear and concise format. The record of drilling events will include:

- start and finish dates of drilling;
- name and location of project;
- project number, client, and site location;
- sample number and depths;
- blow counts and recovery;
- depth to water;
- type of drilling method;
- drilling equipment specifications, including the diameter of drilling tools;
- documentation of any elevated organic vapor readings;
- names of drillers, inspectors, or other people onsite; and
- weather conditions.

IX. Quality Assurance

Equipment will be cleaned prior to use onsite, between each drilling location, and prior to leaving the site. Drilling equipment and associated tools, including augers, drill rods, sampling equipment, wrenches, and other equipment or tools that may have come in contact with soils and/or waste materials will be cleaned with high-pressure steam-cleaning equipment using a potable water source. The drilling equipment will be cleaned in an area designated by the supervising engineer or geologist that is located outside of the work zone. More elaborate cleaning procedures may be required for reusable soil samplers (split-spoons) when soil samples are obtained for laboratory analysis of chemical constituents.

X. References

American Society of Testing and Materials (ASTM) D 1586 - *Standard Test Method for Penetration Test and Split-Barrel Sampling of Soils*.

F-03

Soil Description

Imagine the result

Soil Description

Rev. #: 0

Rev Date: May 20, 2008

I. Scope and Application

This ARCADIS standard operating procedure (SOP) describes proper soil description procedures. This SOP should be followed for all unconsolidated material unless there is an established client-required specific SOP or regulatory-required specific SOP. In cases where there is a required specific SOP, it should be followed and should be referenced and/or provided as an appendix to reports that include soil classifications and/or boring logs. When following a required non-ARCADIS SOP, additional information required by this SOP should be included in field notes with client approval.

This SOP has been developed to emphasize field observation and documentation of details required to:

- make hydrostratigraphic interpretations guided by depositional environment/geologic settings;

- provide information needed to understand the distribution of constituents of concern; properly design wells, piezometers, and/or additional field investigations; and develop appropriate remedial strategies.

This SOP incorporates elements from various standard systems such as ASTM D2488-06, Unified Soil Classification System, Burmister and Wentworth. However, none of these standard systems focus specifically on contaminant hydrogeology and remedial design. Therefore, although each of these systems contain valuable guidance and information related to correct descriptions, strict application of these systems can omit information critical to our clients and the projects that we perform.

This SOP does not address details of health and safety; drilling method selection; boring log preparation; sample collection; or laboratory analysis. Refer to other ARCADIS SOPS, the project work plans including the quality assurance project plan, sampling plan, and health and safety plan (HASP), as appropriate.

II. Personnel Qualifications

Soil descriptions will be completed only by persons who have been trained in ARCADIS soil description procedures. Field personnel will complete training on the ARCADIS soil description SOP in the office and/or in the field under the guidance of an experienced field geologist. For sites where soil descriptions have not previously been well documented, soil descriptions should be performed only by trained persons with a degree in geology or a geology-related discipline.

III. Equipment List

The following equipment should be taken to the field to facilitate soil descriptions:

- field book, field forms or PDA to record soil descriptions;
- field book for supplemental notes;
- this SOP for Soil Descriptions and any project-specific SOP (if required);
- field card showing Wentworth scale;
- Munsell® soil color chart;
- tape measure divided into tenths of a foot;
- stainless steel knife or spatula;
- hand lens;
- water squirt bottle;
- jar with lid;
- personal protective equipment (PPE), as required by the HASP; and
- digital camera.

IV. Cautions

Drilling and drilling-related hazards including subsurface utilities are discussed in other SOPs and site-specific HASPs and are not discussed herein.

Soil samples may contain hazardous substances that can result in exposure to persons describing soils. Routes for exposure may include dermal contact, inhalation and ingestion. Refer to the project specific HASP for guidance in these situations.

V. Health and Safety Considerations

Field activities associated with soil sampling and description will be performed in accordance with a site-specific HASP, a copy of which will be present on site during such activities. Know what hazardous substances may be present in the soil and understand their hazards. Always avoid the temptation to touch soils with bare hands, detect odors by placing soils close to your nose, or tasting soils.

VI. Procedure

1. Select the appropriate sampling method to obtain representative samples in accordance with the selected sub-surface exploration method, e.g. split-spoon or Shelby sample for hollow-stem drilling, Lexan or acetate sleeves for dual-tube direct push, etc.

2. Proceed with field activities in required sequence. Although completion of soil descriptions is often not the first activity after opening sampler, identification of stratigraphic changes is often necessary to select appropriate intervals for field screening and/or selection of laboratory samples.

3. Examine all of each individual soil sample (this is different than examining each sample selected for laboratory analysis), and record the following for each stratum:

- depth interval;
- principal component with descriptors, as appropriate;
- amount and identification of minor component(s) with descriptors as appropriate;
- moisture;
- consistency/density;
- color; and
- additional description or comments (recorded as notes).

The above is described more fully below.

DEPTH

To measure and record the depth below ground level (bgl) of top and bottom of each stratum, the following information should be recorded.

1. Measured depth to the top and bottom of sampled interval. Use starting depth of sample based upon measured tool length information and the length of sample interval.

2. Length of sample recovered, not including slough (material that has fallen into hole from previous interval), expressed as fraction with length of recovered sample as numerator over length of sampled interval as denominator (e.g. 14/24 for 14 inches recovered from 24-inch sampling interval that had 2 inches of slough discarded).

3. Thickness of each stratum measured sequentially from the top of recovery to the bottom of recovery.

4. Any observations of sample condition or drilling activity that would help identify whether there was loss from the top of the sampling interval, loss from the bottom of the sampling interval, or compression of the sampling interval. Examples: 14/24, gravel in nose of spoon; or 10/18 bottom 6 inches of spoon empty.

DETERMINATION OF COMPONENTS

Obtain a representative sample of soil from a single stratum. If multiple strata are present in a single sample interval, each stratum should be described separately. More specifically, if the sample is from a 2-foot long split-spoon where strata of coarse sand, fine sand and clay are present, then the resultant description should be of the three individual strata unless a combined description can clearly describe the interbedded nature of the three strata. Example: Fine Sand with interbedded lenses of Silt and Clay, ranging between 1 and 3 inches thick.

Identify principal component and express volume estimates for minor components on logs using the following standard modifiers.

Modifier	Percent of Total Sample (by volume)
and	36 - 50
some	21 - 35
little	10 - 20
trace	<10

Determination of components is based on using the Udden-Wentworth particle size classification (see below) and measurement of the average grain size diameter. Each size grade or class differs from the next larger grade or class by a constant ratio of ½. Due to visual limitations, the finer classifications of Wentworth's scale cannot be distinguished in the field and the subgroups are not included. Visual determinations in the field should be made carefully by comparing the sample to the field gauge card that shows Udden-Wentworth scale or by measuring with a ruler. Use of field sieves s

recommended to assist in estimating percentage of coarse grain sizes. Settling test or wash method (Appendix X4 of ASTM D2488) is recommended for determining presence and estimating percentage of clay and silt.

Udden-Wenworth Scale Modified ARCADIS, 2008			
Size Class	Millimeters	Inches	Standard Sieve #
Boulder	256 – 4096	10.08+	
Large cobble	128 - 256	5.04 -10.08	
Small cobble	64 - 128	2.52 – 5.04	
Very large pebble	32 – 64	0.16 - 2.52	
Large pebble	16 – 32	0.63 – 1.26	
Medium pebble	8 – 16	0.31 – 0.63	
Small pebble	4 – 8	0.16 – 0.31	No. 5 +
Granule	2 – 4	0.08 – 0.16	No.5 – No.10
Very coarse sand	1 -2	0.04 – 0.08	No.10 – No.18
Coarse sand	½ - 1	0.02 – 0.04	No.18 - No.35
Medium sand	¼ - ½	0.01 – 0.02	No.35 - No.60
Fine sand	1/8 -¼	0.005 – 0.1	No.60 - No.120
Very fine sand	1/16 – 1/8	0.002 – 0.005	No. 120 – No. 230
Silt (subgroups not included)	1/256 – 1/16	0.0002 – 0.002	Not applicable (analyze by pipette or hydrometer)
Clay (subgroups not included	1/2048 – 1/256	.00002 – 0.0002	

Identify components as follows. Remove particles greater than very large pebbles (64-mm diameter) from the soil sample. Record the volume estimate of the greater than very large pebbles. Examine the sample fraction of very large pebbles and smaller particles and estimate the volume percentage of the pebbles, granules, sand, silt and clay. Use the jar method, visual method, and/or wash method (Appendix X4 of ASTM D2488) to estimate the volume percentages of each category.

Determination of actual dry weight of each Udden-Wentworth fraction requires laboratory grain-size analysis using sieve sizes corresponding to Udden-Wentworth fractions and is highly recommended to determine grain-size distributions for each hydrostratigraphic unit.

Lab or field sieve analysis is advisable to characterize the variability and facies trends within each hydrostratigraphic unit. Field sieve-analysis can be performed on selected samples to estimate dry weight fraction of each category using ASTM D2488 Standard Practice for Classification of Soils for Engineering Purposes as guidance, but replace required sieve sizes with the following Udden-Wentworth set: U.S. Standard sieve mesh sizes 6; 12; 20; 40; 70; 140; and 270 to retain pebbles; granules; very coarse sand; coarse sand; medium sand; fine sand; and very fine sand, respectively.

PRINCIPAL COMPONENT

The principal component is the size fraction or range of size fractions containing the majority of the volume. Examples: the principal component in a sample that contained 55% pebbles would be “Pebbles”; or the principal component in a sample that was 20% fine sand, 30% medium sand and 25% coarse sand would be “Fine to coarse Sand” or for a sample that was 40% silt and 45% clay the principal component would be “Clay and Silt”.

Include appropriate descriptors with the principal component. These descriptors vary for different particle sizes as follows.

Angularity – Describe the angularity for very coarse sand and larger particles in accordance with the table below (ASTM D-2488-06). Figures showing examples of angularity are available in ASTM D-2488-06 and the ARCADIS Soil Description Field Guide.

Description	Criteria
Angular	Particles have sharp edges and relatively plane sides with unpolished surfaces.
Subangular	Particles are similar to angular description but have rounded edges.
Subrounded	Particles have nearly plane sides but have well-rounded corners and edges.
Rounded	Particles have smoothly curved sides and no edges.

Plasticity – Describe the plasticity for silt and clay based on observations made during the following test method (ASTM D-2488-06).

- As in the dilatancy test below, select enough material to mold into a ball about ½ inch (12 mm) in diameter. Mold the material, adding water if necessary, until it has a soft, but not sticky, consistency.

- Shape the test specimen into an elongated pat and roll by hand on a smooth surface or between the palms into a thread about 1/8 inch (3 mm) in diameter. (If the sample is too wet to roll easily, it should be spread into a thin layer and allowed to lose some water by evaporation.) Fold the sample threads and reroll repeatedly until the thread crumbles at a diameter of about 1/8 inch. The thread will crumble when the soil is near the plastic limit.

Description	Criteria
Nonplastic	A $^{1}/_{8}$ inch (3 mm) thread cannot be rolled at any water content.
Low	The thread can barely be rolled and the lump cannot be formed when drier than the plastic limit.
Medium	The thread is easy to roll and not much time is required to reach the plastic limit. The thread cannot be rerolled after reaching the plastic limit. The lump crumbles when drier than the plastic limit.
High	It takes considerable time rolling and kneading to reach the plastic limit. The thread can be rolled several times after reaching the plastic limit. The lump can be formed without crumbling when drier than the plastic limit

Dilatancy – Describe the dilatancy for silt and silt-sand mixtures using the following field test method (ASTM D-2488-06).

- From the specimen select enough material to mold into a ball about ½ inch (12 mm) in diameter. Mold the material adding water if necessary, until it has a soft, but not sticky, consistency.
- Smooth the ball in the palm of one hand with a small spatula.
- Shake horizontally, striking the side of the hand vigorously with the other hand several times.
- Note the reaction of water appearing on the surface of the soil.
- Squeeze the sample by closing the hand or pinching the soil between the fingers, and not the reaction as none, slow, or rapid in accordance with the table below. The reaction is the speed with which water appears while shaking and disappears while squeezing.

Description	Criteria
None	No visible change in the specimen.
Slow	Water appears slowly on the surface of the specimen during shaking and does not disappear or disappears slowly upon squeezing.
Rapid	Water appears quickly on the surface of the specimen during shaking and disappears quickly upon squeezing.

MINOR COMPONENT(S)

The minor component(s) are the size fraction(s) containing less than 50% volume. Example: the identified components are estimated to be 60% medium sand to granules, 25 % silt and clay; 15 % pebbles – there are two identified minor components: silt and clay; and pebbles.

Include a standard modifier to indicate percentage of minor components (see Table on Page 5) and the same descriptors that would be used for a principal component. Plasticity should be provided as a descriptor for the silt and clay. Dilatancy should be provided for silt and silt-sand mixtures. Angularity should be provided as a descriptor for pebbles and coarse sand. For the example above, the minor constituents with

modifiers could be: some silt and clay, low plasticity; little medium to large pebbles, sub-round.

SORTING

Sorting is the opposite of grading, which is a commonly used term in the USCS or ASTM methods to describe the uniformity of the particle size distribution in a sample. Well-sorted samples are poorly graded and poorly sorted samples are well graded. ARCADIS prefers the use of sorting for particle size distributions and grading to describe particle size distribution trends in the vertical profile of a sample or hydrostratigraphic unit because of the relationship between sorting and the energy of the depositional process. For soils with sand-sized or larger particles, sorting should be determined as follows:

- Well sorted – the range of particle sizes is limited (e.g. the sample is comprised of predominantly one or two grain sizes)

- Poorly sorted – a wide range of particle sizes are present

You can also use sieve analysis to estimate sorting from a sedimentological perspective; sorting is the statistical equivalent of standard deviation. Smaller standard deviations correspond to higher degree of sorting (see Remediation Hydraulics, 2008).

MOISTURE

Moisture content should be described for every sample since increases or decreases in water content is critical information. Moisture should be described in accordance with the table below (percentages should not be used unless determined in the laboratory).

Description	Criteria
Dry	Absence of moisture, dry to touch, dusty.
Moist	Damp but no visible water.
Wet (Saturated)	Visible free water, soil is usually below the water table.

CONSISTENCY or DENSITY

This can be determined by standard penetration test (SPT) blow counts (ASTM D-1586) or field tests in accordance with the tables below. For SPT blow counts the N-value is used. The N-value is the blows per foot for the 6" to 18" interval. Example: for 24-inch spoon, recorded blows per 6-inch interval are: 4/6/9/22. Since the second interval is 6" to12", the third interval is 12" to 18", the N value is 6+9, or 15. Fifty blow counts for less than 6 inches is considered refusal.

Fine-grained soil – Consistency

Description	Criteria
Very soft	N-value < 2 or easily penetrated several inches by thumb.
Soft	N-value 2-4 or easily penetrated one inch by thumb.
Medium stiff	N-value 9-15 or indented about ¼ inch by thumb with great effort.
Very stiff	N-value 16-30 or readily indented by thumb nail.
Hard	N-value > than 30 or indented by thumbnail with difficulty

Coarse-grained soil – Density

Description	Criteria
Very loose	N-value 1- 4
Loose	N-value 5-10
Medium dense	N-value 11-30
Dense	N-value 31- 50
Very dense	N-value >50

COLOR

Color should be described using simple basic terminology and modifiers based on the Munsell system. Munsell alpha-numeric codes are required for all samples. If the sample contains layers or patches of varying colors this should be noted and all representative colors should be described. The colors should be described for moist

samples. If the sample is dry it should be wetted prior to comparing the sample to the Munsell chart.

ADDITIONAL COMMENTS (NOTES)

Additional comments should be made where observed and should be presented as notes with reference to a specific depth interval(s) to which they apply. Some of the significant information that may be observed includes the following.

- **Odor** - You should not make an effort to smell samples by placing near your nose since this can result in unnecessary exposure to hazardous materials. However, odors should be noted if they are detected during the normal sampling procedures. Odors should be based upon descriptors such as those used in NIOSH “Pocket Guide to Chemical Hazards”, e.g. “pungent” or “sweet” and should not indicate specific chemicals such as “phenol-like” odor or “BTEX” odor.

- Structure

- Bedding planes (laminated, banded, geologic contacts)

- Presence of roots, root holes, organic material, man-made materials, minerals, etc.

- Mineralogy

- Cementation

- NAPL presence/characteristics, including sheen (based on client-specific guidance)

- Reaction with HCl (typically used only for special soil conditions)

- Origin, if known (capital letters: LACUSTRINE; FILL; etc.)

EXAMPLE DESCRIPTIONS

51.4 to 54.0' Clay, some silt, medium to high plasticity; trace small to large pebbles, subround to subangular up to 2" diameter; moist; stiff; dark grayish brown (10YR 4/2) NOTE: Lacustrine; laminated 0.01 to 0.02 feet thick, laminations brownish yellow (10 YR 4/3).

32.5 to 38.0' Sand, medium to Pebbles, coarse; sub-round to sub-angular; trace silt; poorly sorted; wet; grayish brown (10YR5/2). NOTE: sedimentary, igneous and metamorphic particles.

Unlike the first example where a density of cohesive soils could be estimated, this rotosonic sand and pebble sample was disturbed during drilling (due to vibrations in a loose Sand and Pebble matrix) so no density description could be provided. Neither sample had noticeable odor so odor comments were not included.

The standard generic description order is presented below.

- Depth

- Principal Components
    - Angularity for very coarse sand and larger particles
    - Plasticity for silt and clay
    - Dilatancy for silt and silt-sand mixtures
- Minor Components
- Sorting
- Moisture
- Consistency or Density
- Color
- Additional Comments

VII. Waste Management

Project-specific requirements should be identified and followed. The following procedures, or similar waste management procedures are generally required.

Water generated during cleaning procedures will be collected and contained onsite in appropriate containers for future analysis and appropriate disposal. PPE (such as gloves, disposable clothing, and other disposable equipment) resulting from personnel cleaning procedures and soil sampling/handling activities will be placed in plastic bags. These bags will be transferred into appropriately labeled 55-gallon drums or a covered roll-off box for appropriate disposal.

Soil materials will be placed in sealed 55-gallon steel drums or covered roll-off boxes and stored in a secured area. Once full, the material will be analyzed to determine the appropriate disposal method.

VIII. Data Recording and Management

Upon collection of soil samples, the soil sample should be logged on a standard boring log and/or in the field log book depending on Data Quality Objectives (DQOs) for the task/project. Two examples of standard boring logs are presented below.

The general scheme for soil logging entries is presented above; however, depending on task/project DQOs, specific logging entries that are not applicable to task/project goals may be omitted at the project manager's discretion. In any case, use of a consistent logging procedure is required.

Completed logs and/or logbook will be maintained in the task/project field records file. Digital photographs of typical soil types observed at the site and any unusual features should be obtained whenever possible. All photographs should include a ruler or common object for scale. Photo location, depth and orientation must be recorded in the daily log or log book and a label showing this information in the photo is useful.

ARCADIS Page _____ of _____

Sample Log

Well/Boring _____ Project Name and No. _____

Site Location _____ Drilling Started _____ Drilling Completed _____

Total Depth Drilled _____ feet Hole Diameter _____ inches Sampling Interval _____ feet

Length and Diameter of Sampling Device _____ Type of Sampling Device _____

Drilling Method _____ Drilling Fluid Used _____

Drilling Contractor _____ Driller _____ Helper _____

Prepared By _____ Hammer Weight _____ Hammer Drop _____ inches

Sample Depth (feet below land surface) From	To	Sample Recovery (feet)	Time/Hydraulic Pressure or Blows per 6 inches	Sample Description	PID (ppm)

IX. Quality Assurance

Soil descriptions should be completed only by appropriately trained personnel. Descriptions should be reviewed by an experienced field geologist for content, format and consistency. Edited boring logs should be reviewed by the original author to assure that content has not changed.

X. References

ARCADIS Soil Description Field Guide, 2008 (in progress)

Munsell® Color Chart – available from Forestry Suppliers, Inc.- Item 77341 "Munsell® Color Soil Color Charts

Field Gauge Card that Shows Udden-Wentworth scale – available from Forestry Suppliers, Inc. – Item 77332 "Sand Grain Sizing Folder"

ASTM D-1586, Test Method for Penetration Test and Split-Barrel Sampling of Soils

ASTM D-2488-00, Standard Practice for Description and Identification of Soils (Visual-Manual Procedure)

United States Bureau of Reclamation. Engineering Geology Field Manual. United States Department of Interior, Bureau of Reclamation. http://www.usbr.gov/pmts/geology/fieldmap.htm

Petrology of Sedimentary Rocks, Robert L. Folk, 1980, p. 1-48

NIOSH Pocket Guide to Chemical Hazards

Remediation Hydraulics, Fred C. Payne, Joseph A. Quinnan, and Scott T. Potter, 2008, p 59-63

F-04

Surface and Subsurface Soil Sampling Using Manual Methods

ARCADIS
Infrastructure, environment, facilities

Imagine the result

Surface and Subsurface Soil Sampling Using Manual Methods

Rev. #: 1

Rev Date: March 6, 2009

I. Scope and Application

This document describes procedures for surface and subsurface soil sampling using hand tools.

II. Personnel Qualifications

ARCADIS personnel directing, supervising, or leading soil sampling activities should have a minimum of 2 years of previous environmental soil sampling experience. ARCADIS personnel providing assistance to soil sample collection and associated activities should have a minimum of 6 months of related experience or an advanced degree in environmental sciences.

III. Equipment List

The following materials will be available, as required, during soil sampling activities:

- personal protective equipment (PPE), as specified by the site Health and Safety Plan (HASP);
- stainless steel bowls;
- stainless steel spoons;
- stainless steel spades;
- stainless steel hand augers;
- indelible ink pens;
- engineer's ruler or survey rod;
- sealable plastic bags (e.g., Ziploc®);
- equipment decontamination materials
- sample bottles and preservatives appropriate for the parameters to be sampled for laboratory analysis, if any;
- transport container with ice (if sampling for laboratory analysis);
- appropriate sample containers and forms; and

- field notebook and/or personal digital assistant (PDA).

Documentation forms and notebooks to have on hand include: soil sample log forms, chain-of-custody forms, sample labels and seals, field logbook/PDA.

IV. Cautions / Hazards

Task specific Job Safety Analysis (JSAs) must be developed to identify site hazards associated with the investigation and reviewed by all field crew members prior to the start of work. Safe Performance Self-Assessment (SPSA) to be performed by employees before performing a new task. Underground utilities will be cleared per the ARCADIS Utility Location Policy and Procedure.

V. Health and Safety Considerations

Soil sample collection will be performed in accordance with a site-specific Health and Safety Plan (HASP) and task specific JSA forms, copies of which will be present on site during such activities.

VI. Procedure

Soil samples may be collected at intervals from the ground surface to various depths. Sample locations will be identified using stakes, flagging, or other appropriate means, and will be noted in a field logbook, PDA, and/or soil sampling logs. Sample points will be located by surveying, use of a global positioning system (GPS), and/or measurements from other surveyed site features.

1. Equipment that will come in contact with the soil sample should be cleaned in accordance with the appropriate equipment decontamination SOP(s), or else new, disposable equipment should be used. Collect equipment blanks in accordance with the project Quality Assurance Project Plan (QAPP).

2. Clear the ground surface of brush, root mat, grass, leaves, or other debris.

3. Use a spade, spoon, scoop, or hand auger to collect a sample of the required depth interval.

4. Use an engineer's ruler or measuring tape to verify that the sample is collected to the correct depth and record the top and bottom depths from the ground surface.

5. To collect samples below the surface interval, remove the surface interval first; then collect the deeper interval. To prevent the hole from collapsing, it may be necessary to remove a wider section from the surface or use cut polyvinyl chloride (PVC) tubing or pipe to maintain the opening.

6. Collect samples for volatile organic compounds (VOCs) as discrete samples using Encore® samplers or cut syringes (see Extraction/Preservation of Soil/Sediment Samples for VOCs SOP).

7. Homogenize samples for other analyses across the required interval or mix them with other discrete grab samples to form a composite sample (see Compositing or Homogenizing Samples SOP).

8. Place sample in clean sample container; label with sample identification number, date, and time of collection; and place on ice (if obtained for laboratory analysis). Prepare samples for packaging and shipping to the laboratory in accordance with the Chain-of-Custody Handling, Packing, and Shipping SOP.

9. Backfill sample holes to grade with native material or with clean builder's sand or other suitable material.

VII. Waste Management

Waste soils will be managed as specified in the FSP or Work Plan, and according to state and /or federal requirements. Personal Protective Equipment (PPE) and decontamination fluids will be contained separately and staged in the designated temporary investigation-derived waste storage area at the LF-04 site for appropriate disposal. Waste containers must be a sealed and labeled at the time of generation. Labels will indicate date, sample locations, site name, city, state, and description of the matrix (e.g., soil, PPE).

VIII. Data Recording and Management

Field documentation such as log book entries and chain-of –custody records will be transmitted to the ARCADIS PM or Task Manager each day unless otherwise directed. The field team leader will retain all site documentation while in the field and add to project files when the field mobilization is complete.

IX. Quality Assurance

Quality assurance samples (rinse blanks, duplicates, and MS/MSDs) will be collected at the frequency specified in the FSP and/or QAPP and depending on the project

quality objectives. Reusable soil sampling equipment will be cleaned prior to use following equipment cleaning SOP. Field rinse blanks will be used to confirm that decontamination procedures are sufficient and samples are representative of site conditions. Any deviations from the SOP will be discussed with the project manager prior to changing any field procedures.

F-05

Extraction/Preservation of Soil Sediment for VOCs

ARCADIS
Infrastructure, environment, facilities

Imagine the result

Extraction/Preservation of Soil/Sediment for VOCs

Rev. #: 1

Rev Date: April 9, 2008

I. Scope and Application

Soil or sediment samples collected for volatile organic compound (VOC) analysis must be handled in a manner which will minimize the loss of contaminants due to volatilization and biodegradation. Based on experience and open literature, it has been concluded that field extraction and preservation must be conducted in a manner to ensure that contaminants do not degrade or volatilize during sample handling and transport. The following equipment and procedures summarize the method of field preservation of soil samples.

II. Personnel Qualifications

ARCADIS field personnel will have current health and safety training, including 40-hour HAZWOPER training, site supervision training, and site-specific health and safety training. At least one person on the sampling team must be trained per Department of Transportation (DOT) and (International Air Transportation Administration (IATA) requirements to prepare and offer shipments of samples by a commercial carrier and training in Materials of Trade when transporting this material in ARCADIS or private vehicles for work-related purposes. Trained personnel will use the following shipping guides:

- ARCADIS Hazardous Materials (aka Dangerous Goods) using Shipping Guide No. US-002 - Environmental Samples-Solids Known or Suspected of Being Hazardous per DOT Definition

- ARCADIS Hazardous Materials (aka Dangerous Goods) using Shipping Guide No. US-012 – Environmental Samples solid containing Methanol and or Sodium Bisulfate Preservative (collected using TeraCore® Encore®, EazyDraw® Syringe Samplers).

In addition, ARCADIS personnel overseeing, directing, or supervising soil collection will be versed in the applicable standard operating procedures (SOPs) to successfully complete the sample activities.

III. Equipment List

- portable balance, small electronic or manual scale calibrated with an appropriate certified weight;

- analyte-free water;

- Site specific Health and Safety Plan (HASP);

- personal protective equipment (PPE), per the HASP;
- 1¾ cm inside-diameter disposable soil coring device syringes (supplied by laboratory);
- coolers or transport containers with contained ice;
- large soil sampling device (e.g., split-spoon sampler);
- indelible ink pens;
- field logbook;
- duct tape;
- 1-gallon freezer bags;
- appropriate forms;
- preservative-free empty sample containers;
- Encore™ (or equivalent, e.g. TeraCore®, EazyDraw®) samplers and cut plastic syringes; and/or
- sampling containers provided by the laboratory (dependent on the type of purge and trap unit that will be used to analyze the samples):
  - low-concentration containers with a magnetic stir bar and a solution of 1 gram of sodium bisulfate dissolved in 5 milliliter (mL) of organic-free water. Tare weight of container and contents should be recorded on the label.
  - high-concentration [greater than 200 micrograms per kilogram (ug/kg)] containers will contain 10 mL of methanol and also have the tare weight recorded on the label. Tare weight of the container and contents should be recorded on the label.

IV. Cautions

Once the proper weight has been contained within the syringe, the piston of the syringe is used to push the soil into the 40-mL sample vial. Care must be taken so as not to spill or splash the preservative already in the vials. Caution must also be used when recapping the vial, as even a small amount of soil on the rim of the vial may

cause improper sealing and subsequently lead to loss of the preservative and surrogates. The samples must be placed in coolers and maintained at approximately 4°C. The soil sample vials will be weighed by the laboratory before extractions are completed. For this reason, extra labels or tape are not to be added to the vials. Containers or syringes that differ from the tare weight by more than 0.01 gram should not be used.

Avoid over tightening sample vials lids. Over tightened lids may damage the Teflon seal and integrity of the sample.

Samples unpreserved at 4°C have a holding time of 48-hours, from the time of collection and analysis or preservation. If samples are to be shipped unpreserved, plan to express mail via air and to shipment on the same day as collection, unless performance data can be provided to support longer holding times. The 40 mL vials are unacceptable as unpreserved sample containers due to VOC loss via volatilization and biodegradation.

Freezing unpreserved samples in proper containers may be considered to extend holding times to 5 days.

Soils are to be collected and contained in the least amount of time possible to minimize the loss of VOCs. Trimming of outer layer of the exposed the soil sample should be considered, if the sample has been exposed to the atmosphere for more than a couple of minutes,

V. Health and Safety Considerations

Care must be taken so as not to spill or splash the preservative already in the vials, when applicable. Sodium bisulfate is a strong acid and can cause severe burns. If the preservative makes contact, immediately flush with potable water. Immediately consult with a medical professional if any burning, pain, or irritation persists.

The 40-mL sample vials can shatter while tightening. Amber vials are more prone to breakage. Use appropriate cut resistant gloves to avoid possible laceration while tightening vials.

Refer to the site specific health and safety plan (HASP) for further health and safety considerations.

VI. Procedure

Container Preparation

Container preservation may be done either in the field or in the laboratory. Procedures for both methods are provided in this SOP. Standard sample containers for laboratory preservation will include either TeraCore® Encore®, EazyDraw®.

Field preservation will depend on the soil concentration, if known.

For high concentration soils (greater than 200 ug/kg), laboratory-prepared 40-mL VOA vials filled with 5 mL to 10 mL of analyte-free purge and trap grade methanol (at a minimum of 5 mL methanol) to 5 gram soil/sediment. The sample container size may be dependent on the type of purge and trap unit that will be used to analyze the samples.

Containers for low VOC concentrations will include 1 gram of sodium bisulfate dissolved in 5 mL of organic-free water.

The analytical laboratory also adds the appropriate surrogate compounds to the methanol based on the analytical method quality assurance [e.g. 8015, 8021, 8260b, Massachusetts Compendium of Analytical Methods for Volatile Petroleum Hydrocarbons (VPH), or 8260b, USEPA, 2002; DEQE, 2000; MADEP, 2003]. The laboratory records the weight of each vial to the nearest 0.1 gram after both methanol and surrogates have been added. These containers must be stored in coolers and maintained at approximately $4^{o}C \pm 2^{o}$.

Sampling

Selection of a soil/sediment sampling interval will be determined based on a site-specific sampling plan and collected either via TeraCore® Encore®, EazyDraw® or by preservation in the field with methanol and/or sodium bisulfate in containers pre-measured by the laboratory.

<u>Preservation in the Field (laboratory pre-filled sample containers)</u>

Soil/sediment is collected in-situ or from a larger sampling device (e.g., split-spoon, auger, or other sampling device) with a disposable coring device (syringe), also supplied by the laboratory, as soon as possible upon sample retrieval to avoid exposure to air and VOC loss. A coring device that may be used of amendable to soil/sediment type consists of a plastic syringe with the tip removed. It is essential that

the diameter be suitable for injection into the sample container. A small electronic or manual balance is needed for weighing the syringe and soil.

1. Once the tare weight of the syringe is determined and a sample interval is selected, soil sample collection is accomplished by manually pushing a syringe into the soil/sediment with the piston withdrawn or collection with a stainless steel spoon.

2. The soil sample weight is determined by subtracting the tared weight from the total weight of the soil and syringe.

3. Acceptable soil sample weight is 5 grams for a 40-mL vial sample container. However, the laboratory may supply larger sized sample containers and require a laboratory-specific weight of soil/sediment.

   - If a syringe is used and the sample weight is less than 5 grams, the syringe may be pushed into the soil again, with the piston withdrawn to gather additional soil.

   - If the sample weight is greater than 5 grams, a portion of soil may be extruded and removed from the syringe.

4. Weigh the containers in the field. Record the weight of each sample. Subtract the tare weight of the container and preservative to obtain the weight of sample. Record the weights on the sample labels and in the field notebook.

5. If the volatile concentrations of the sample are not known, two low-concentration vials and one high-concentration vial should be prepared, as discussed in Section III. Additional vials are needed for samples to be used for laboratory quality control purposes. Note: Samples that contain carbonate minerals may effervesce upon contact with the acidic low-concentration preservative. If the effervescence is small, the loss of volatiles will be limited by quickly capping the vial. If large amounts of gas are generated, target analytes may be lost and the vials may shatter. If this occurs, document the issue in the field notebook and collect another sample using a fresh container prepared with 5 mL (1 mL of water is equivalent to 1 gram of water) of analyte-free water and no preservative.

6. (Place samples on ice immediately after collection and ship or deliver to the laboratory as soon as possible.

7. An additional sample fraction should be placed in a clean glass jar with no preservative for laboratory use to determine percent solids. Moisture content determination is required to report the sample results on a dry weight basis. Moisture content determination is required to report the sample results on a dry weight basis. If soil samples will be analyzed for other parameters, the moisture content can usually be taken from the other sample containers. However, when sampling for VOCs only, a small separate laboratory-supplied container must be filled.

Laboratory Preservation (Encore™ or equivalent)

1. Collect an approximate 5-gram sample using an Encore™ sampler or cut plastic syringe.

2. Place samples on ice immediately after collection and ship or deliver to the laboratory as soon as possible. Samples in capped Encore™ samplers should be delivered within 24 hours of collection to allow the sample to be persevered within 48 hours from collection and meet holding time.

3. In addition to the soil sample collected for VOC analysis, soil must be collected and placed into an empty container for moisture content analysis. Moisture content determination is required to report the sample results on a dry weight basis. If soil samples will be analyzed for other parameters, the moisture content can usually be taken from the other sample containers. However, when sampling for VOCs only, a small separate laboratory-supplied container must be filled.

Shipping Container Preparation

Use ARCADIS Hazardous Materials (aka Dangerous Goods) using Shipping Guide No. US-012 – Environmental Samples solid containing Methanol and or Sodium Bisulfate Preservative (collected using TeraCore® Encore®, EazyDraw® Syringe Samplers) for sample container preparation. Among other requirements depending on whether the samples are shipped by air verse by ground shipping containers must be marked with **"This package conforms to 49 CFR 173.4."** Note: in order to comply with 49 CFR 173.4, the total volume of methanol mixture per shipping container must be less than 30 grams. In addition, other pertinent requirements of this reference are as follows:

- Each inner receptacle is securely packed in an inside packaging with cushioning and absorbent material. The inside packaging cannot react chemically with the

material and needs to be capable of absorbing the entire contents of the receptacle. (Note: a foam container for the vials meets these requirements.)

- The inside packaging is securely packed in a strong outside packaging. (Note: a cooler meets this requirement.)
- The gross mass of the completed package does not exceed 64 pounds.

Consult ARCADIS Hazardous Materials (aka Dangerous Goods) using Shipping Guide No. US-012 – Environmental Samples, Solid Containing Methanol and/or Sodium Bisulfate Preservative (collected using TeraCore® Encore®, EazyDraw® Syringe Samplers) for appropriate packing and labeling for shipments via air and ground. In addition, consult the Chain-of-Custody SOP.

VII. Waste Management

Used methanol or sodium bisulfate, if any, will be contained in an airtight drum or container. Containers will be labeled with the project name, date, and contents. Appropriate client specified personnel will be notified for the transport of container to the appropriate on-site storage area for disposal at an appropriate facility. Any unused sample containers with methanol or sodium bisulfate will be shipped back to the laboratory using original packaging material per DOT or IATA procedures.

VIII. Data Recording and Management

Sampling activities, (i.e. location, depth, soil/sediment type, sample identification, sample container tare weight, sample weights, effervescence) will be recorded in the field logbook. Chain of custody (COC) will be prepared per the approved SOP and copies of the COC will be transmitted to the project manager and maintained in project files.

IX. Quality Assurance

Quality assurance activities will be completed to comply with the site specific sampling plan and/or quality assurance project plan.

A methanol trip blank should accompany the sample containers at all times in the field and during transport. This consists of a sample container prepared in a similar manner as the soil sample containers. One trip blank should accompany each sample delivery group.

Field blanks and ambient air blanks are optional when sampling via the methanol preservation method.

Discrete blind duplicate samples may be collected in separate soil/sediment sample containers. Compositing or homogenizing multiple soil/sediment samples into one sample container is not acceptable.

Site-specific matrix spike and matrix spike duplicate (MS/MSD) analyses, if required, may be collected from a single soil/sediment sample container; no additional sample volume is required.

X. References

Arizona Department of Environmental Quality (ADEQ), 2000. Implementation of EPA Method 5035-Soil Preparation of EPA Method 8015B, 8121B and 8260B, Arizona Revised Statues (A.R.S.) 49-104 (A). April 19, 2000.

Massachusetts Department of Environmental Protection (MADEP), 2003. Method for the Determination of Volatile Petroleum Hydrocarbons, MADEP-VPH-03-1.1, Revision 1.1. December 2003.

USEPA, 2002. *Test Methods for Evaluating Solid Waste*, SW-846, Third Edition, Method 5035A – Closed System Purge and Trap for Volatile Organics in Soils and Waste Samples. July 2002.

F-06

Surface Water Sampling from Surface Water Body

ARCADIS

Infrastructure · Water · Environment · Buildings

Imagine the result

Surface Water Sampling from Surface Water Body

Rev. #: 0

Rev Date: August 30, 2012

I. Scope and Application

This Standard Operating Procedure (SOP) describes the ways and means of obtaining a surface water sample from a surface water body. This procedure assumes that the surface water sampling is routine (e.g., collecting a water sample from a two-foot deep stream). The purpose of this procedure is to assure quality control in field operations and uniformity between different field personnel.

II. Personnel Qualifications

ARCADIS field sampling personnel will have current health and safety training. In addition, sampling personnel will be versed in the relevant SOPs and possess the skills and experience necessary to successfully complete the desired field work.

III. Equipment List

The following equipment will be available, as required, during surface water sampling:

• personal protective equipment (as required by the Health and Safety Plan [HASP])

• flagging

• extension rod

• combination water quality meter or individual meters for each parameter of interest

• appropriate transport containers and packing, labeling, and shipping materials

• field notebook

IV. Cautions

The selection of sampling equipment and methodology needs to be made based on the constituents of concern, sampling objectives, and site conditions.

V. Health and Safety Considerations

Use an extension rod, where appropriate, to avoid awkward body positioning or overreaching. Review the HASP for appropriate health and safety equipment.

VI. Procedure

1. Locate and identify the surface-water sampling location. Prior to sample collection, characteristics (e.g., size, depth, flow) of the surface water body should be recorded in the field logbook. Sampling should proceed from downstream to upstream locations.

2. Approach sampling location from a down flow direction. Take special care within three to four feet of the actual sampling location so as not to disturb fine sands and silts that might affect analyses.

3. Record the sampling location, time, date, and other pertinent information on a water sampling log.

4. Immerse a clean polypropylene beaker in the center of the surface water body and allow it to partially fill with water. In large bodies of water, such as ponds or lakes, this may not be possible. In these cases, alternative methods must be considered.

5. Use the collected water to rinse the collection beaker and the sampler's gloves. Immerse the beaker again for sample collection. If the volume obtained is not sufficient to fill all sample containers, portion aliquots into each container and submerse the beaker again for additional water until adequate water has been obtained to fill all sample containers.

6. Immerse the beaker a final time to collect enough water to perform appropriate field tests. Record on sample log: physical characteristics (e.g., color, clarity, presence of sheen, odor), pH, conductivity, and temperature.

7. Discard the beaker, the gloves, and any other disposable equipment in plastic garbage bag used to prevent cross contamination between sampling locations.

8. Prepare samples for shipment.

VII. Waste Management

No waste management is anticipated for surface water sample collection.

VIII. Data Recording and Management

All surface water sample and location measurements will be maintained in a field notebook or log. Upon project completion, field notebooks will be forwarded to the Project Manager for

storage in the project files. Samplers should keep copies for their files. Samplers will forward copies to the Project Manager for quality assurance checks during project implementation at a frequency determined by the Project Manager.

IX. Quality Assurance

Samplers will forward copies to the Project Manager for quality assurance checks during project implementation at a frequency determined by the Project Manager.

F-07

Sediment Sampling

ARCADIS
Infrastructure, environment, facilities

Imagine the result

Sediment Sampling

Rev. #: 0

Rev Date: July 29, 2003

I. Scope and Application

This Standard Operating Procedure (SOP) sets forth the field procedures for collection of sediment via Lexan tubing and grab samples using a hand-held dredge.

II. Personnel Qualifications

To be completed by Preparer and reviewed by Technical Expert.

III. Equipment List

The following materials will be available, as required, during sediment sampling:

- health and safety equipment (as required by the site Health and Safety Plan [HASP]);
- cleaning equipment;
- disposable aluminum pans;
- disposable spatulas;
- appropriate sample containers and forms;
- coolers with ice;
- field notebook;
- anchor;
- boat and motor;
- rope;
- survey's rod;
- duct tape;
- Lexan tubing with end caps;
- push rod;

- hacksaw;
- steel core driver;
- vacuum pump;
- piston sampler/check valve push core device; and
- 6-foot rule.

IV. Cautions

To be completed by Preparer and reviewed by Technical Expert.

V. Health and Safety Considerations

To be completed by Preparer and reviewed by Technical Expert.

VI. Procedures

The following procedures will be used to collect sediment samples:

1. Don health and safety equipment (as required in the HASP).
2. Clean reusable sampling equipment as follows: non-phosphate detergent and distilled water wash; distilled water rinse; rinse equipment with solvent (hexane); distilled water rinse; allow to air dry and wrap in aluminum foil.
3. Use GPS surveying techniques to locate the proposed sample location and position the boat with anchors.
4. Identify the proposed sample location in the field notebook, along with other appropriate information collected during sediment sampling activities.
5. Measure the total depth of the water using a surveyor's rod to the nearest 0.1 foot.
6. At each sample location, lower a section of Lexan tube until it just reaches the top of the sediment (sections of Lexan tube may need to be spliced together or the Lexan tube may be attached to a check valve core device).

7. Push the Lexan tube with a straight vertical entry into the sediment so as to secure a reliably representative core sample. Measure the depth of sediment.

8. Drive the tube several inches more using a steel core drive and measure the additional distance. (This procedure is performed to obtain a “plug” at the bottom of the core and prevent the loose sediment from escaping.)

9. Place a vacuum pump on the top end of the Lexan tube and create a vacuum to prevent the sediment from escaping (note this is not needed if using a check valve core device).

10. Slowly pull the tube from the sediment, twisting it slightly as it is removed (if necessary).

11. Before the tube is fully removed from the water, place a cap on the bottom end of the tube while it is still submerged.

12. Keeping the tube upright, wipe the bottom end dry and seal the end with duct tape and label. Measure the length of sediment recovered and evaluate the integrity of the core. If additional cores are necessary to obtain a sufficient sample, repeat the coring procedure at the location adjacent to the previous one sampled.

13. While keeping the core upright, use a hacksaw to make a horizontal cut in the tube approximately 1 inch above the sediment.

14. Recap the cut end of the tube, seal the cap with duct tape, and mark this end as “top.”

15. Wipe the tube dry.

16. If sample sectioning is required, slice tube open or push sediment from tube and slice according to appropriate segmenting scheme (i.e., every 2 inches in cap material and 0 to 3 inches in native sediment).

17. Homogenize samples in a disposable aluminum pan.

18. Place homogenized sample in appropriate sample containers and cap.

19. Label all sample containers.

20. Place filled sample containers on ice in a cooler.

21. Follow procedures for packing, handling, and shipping with associated chain-of-custody procedures.

22. Record required information on the appropriate forms and/or field notebook.

23. Field duplicate and matrix spike/matrix spike duplicate (MS/MSD) samples will be obtained for every 20 sediment samples collected.

24. As an alternative sampling method, Steps 6 through 15 may be replaced with Steps a through g, as follows:

    a. At each sample location, drop open dredge from side of boat making sure that the end of the rope is maintained at all times.

    b. Once the dredge has been allowed to settle into the bottom sediment, a hard pull on the rope will close the sediment inside the dredge.

    c. Retrieve the dredge into the boat.

    d. Open the dredge to allow the sediment to empty onto a stainless steel tray or bowl.

    e. Multiple casts will be made and composited at each location until sufficient sample volume is obtained.

    f. Observe the sample and record descriptions in the field notebook.

    g. If chemical laboratory analyses are being performed, rinse blanks will be obtained by pouring deionized water through a cleaned stainless steel dredge onto a cleaned stainless steel tray. From the tray, the appropriate sample containers will be filled. Rinse blanks should be collected at the start and finish of sampling activities.

VII. Data Recording and Project Management

To be completed by Preparer and reviewed by Technical Expert.

VIII. Quality Assurance

To be completed by Preparer and reviewed by Technical Expert.

IX. References

To be completed by Preparer and reviewed by Technical Expert.

F-08

Groundwater Sampling Using HydroPunch™

ARCADIS
Infrastructure, environment, facilities

Imagine the result

Groundwater Sampling Using HydroPunch™

Rev. #: 01

Rev Date: March 3, 2009

I. Scope and Application

This document describes procedures for collecting discrete-depth groundwater samples using the HydroPunch™ sampling device (QED Environmental Services, Inc.), or equivalent, during drilling in unconsolidated materials. HydroPunch™ can be used to collect a single sample from a selected depth, or multiple samples from a single borehole to produce a profile of groundwater quality data versus depth. The HydroPunch™ sampler is typically driven through open-ended drill casing or hollow-stem augers.

HydroPunch™ consists of a drive point, a stainless steel screen section, a sample reservoir integral within the tool body, and assorted O-rings and check valves to create watertight seals within the various components. Two models of HydroPunch™ have been developed, having slightly different designs and/or component parts as shown on the attached HydroPunch™ schematic drawings. All components are made of stainless steel, Teflon, or other relatively inert materials. The tool can be disassembled easily for cleaning between samples.

Although this document refers to groundwater sample collection, HydroPunch™ is also capable of obtaining samples of light or dense non-aqueous phase liquid (LNAPL or DNAPL, respectively), if present at sufficient saturation and pressure head at the depth of the ampler during deployment.

II. Personnel Qualifications

ARCADIS personnel directing, supervising, or leading groundwater sample collection activities using HydroPunch™ should have a minimum of 2 years of previous groundwater sampling experience and current health and safety training including 40-hour HAZWOPER training, site supervisor training, site-specific training, first aid, and CPR, as needed. Field personnel will also be compliant with client-specific training requirements. In addition, ARCADIS field sampling personnel will be versed in the relevant SOPs and posses the required skills and experience necessary to successfully complete the desired field work.

III. Equipment List

The following materials are required for the collection of discrete-depth groundwater samples using HydroPunch™.

- HydroPunch™ sampling device provided by drilling subcontractor

- Drill casing or augers having an effective inside diameter of at least 1.25 inches (to be provided by drilling subcontractor)
- Electronic water-level probe
- Groundwater sample containers provided by the testing laboratory
- Health and safety monitoring equipment and personal protective equipment
- Materials for decontamination of the sampler between samples

IV. Cautions

Because the HydroPunch™ sampler is a groundwater sampling device, it must be used in saturated soils. Positive hydraulic head is required to fill the sampler, and the sampler may fill slowly or not at all at depths just below the water table. HydroPunch™ I and HydroPunch™ II in the "groundwater mode" cannot be used at sampling depths less than 5 feet below the water table. HydroPunch™ II in the "hydrocarbon mode" is preferred for sampling at the water table.

Some types of geologic materials may not allow effective use of the HydroPunch™ sampler, even at significant depth below the water table. For example, extremely dense soils or those containing cobbles or boulders may resist penetration of the sampler, precluding its use. Low permeability soil such as silt and clay may not produce groundwater at a sufficient rate to fill the HydroPunch™ sampler within a practicable timeframe. For these types of situations, an alternative approach should be considered, such as collecting a sample of saturated soil for analysis.

Groundwater samples collected using HydroPunch™ should be considered screening-level data, suitable for obtaining a general understanding of groundwater quality and selecting depths for monitoring well screens. Samples obtained using HydroPunch™ are commonly more turbid than those produced from installed, developed monitoring wells. Higher turbidity could affect sample quality if samples are to be analyzed for sorptive analytes such as polychlorinated biphenyls (PCBs), polycyclic aromatic hydrocarbons (PAHs), pesticides or metals. For these types of analytes, unfiltered HydroPunch™ samples could produce concentrations that are higher than those of sediment-free aquifer water. Field or laboratory filtering of the samples obtained for these types of constituents should be considered. For less-sorptive analytes (volatile organic compounds, anions such as chloride, etc.), sample turbidity is unlikely to adversely impact the direct usability of unfiltered samples.

V. Health and Safety Considerations

- Sample collection will be performed using procedures consistent with the project Health and Safety Plan.
- Appropriate personal protective equipment must be worn by ARCADIS field personnel

VI. Procedure

The following steps will be followed during the collection of discrete-depth groundwater Samples using HydroPunch™:

1. Select the desired groundwater sampling depth.
2. The drilling subcontractor will advance the borehole to approximately 2 feet above the depth from which a discrete water sample is to be obtained.
3. The drilling subcontractor will disassemble the HydroPunch™ sampling device according to the manufacturer's instructions to allow the sampler to be decontaminated. The sampler should be completely disassembled, including O-rings and/or check valves.
4. Decontaminate the sampler as appropriate for the range of groundwater analytes to be sampled for, by washing with laboratory-grade detergent and potable water wash, followed by solvent rinse (if sampling for organics) and final rinse with deionized or distilled water. Check the condition of the O-rings during each cleaning, and replace if necessary.
5. The drilling subcontractor will reassemble the decontaminated HydroPunch™ sampling device according to the manufacturer's instructions and lower the device to the bottom of the borehole.
6. The drilling subcontractor will push or drive the HydroPunch™ 5 feet below the bottom of the casing or augers, then retract the sampler 3 feet upward. Subsurface friction will retain the drive point in place, exposing the screen and allowing groundwater to enter the sampling tool.
7. Allow sufficient time to allow the sampler to fill with water. Typically 30 minutes is sufficient, except in low permeability materials.
8. Collect a groundwater sample by:

- Retracting the sampler to ground surface – the drilling subcontractor will then open the sampler allowing collection of the groundwater sample [if using the HydroPunch™ I or else the HydroPunch™ II in groundwater mode (see Attachment A)]

- Lowering a bailer or a peristaltic or inertia pump tube through the rods and body of the sampler, and retrieving the bailer or operating the pump to collect the groundwater sample [if using the HydroPunch™ II in hydrocarbon mode (see Attachment A)]

9. Perform field filtering of samples if required by the work plan, FSP and/or QAPP.

10. Obtain field water quality measurements if required by the work plan, FSP and/or QAPP.

11. Label the sample containers at the time of sampling with the following information.

    - Project name and number
    - Sample location
    - Sample number
    - Date and time of collection
    - Sampler initials
    - Analyses required

12. Preserve, store, handle, and ship samples to the analytical laboratory under chain of custody procedures as described in by the work plan, FSP and/or QAPP.

VII. Waste Management

Investigation-derived waste will be managed as described in the Investigation-Derived Waste Handling and Storage SOP.

VIII. Data Recording and Management

Borehole identification, sample depth, sample date and time will be recorded in the field notebook, the boring log, and/or the personal digital assistant (PDA). The sample will also be identified on an appropriate chain of custody form, as appropriate for submittal to an analytical laboratory for analysis, if required. Consider digital photography to record unusual field conditions or to document compliance.

IX. Quality Assurance

The HydroPunch™ sampling device will be decontaminated as appropriate for the list of analytical parameters for which the groundwater samples are collected.

X. References

No references are required to accompany this SOP.

Attachment A - Hydropunch® Schematics

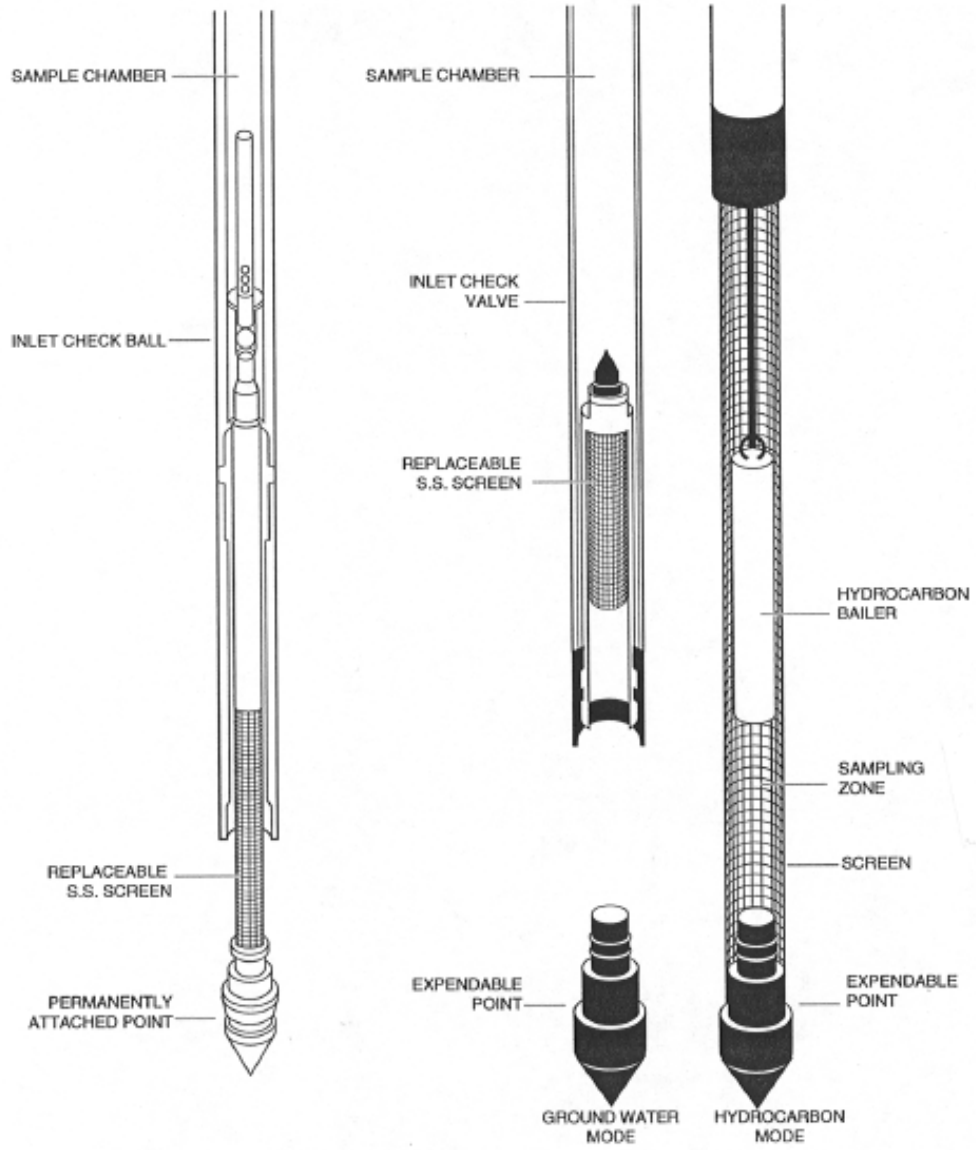

HydroPunch® I

- Collects ground water samples only (not floating layer)
- Permanently-attached drive cone and screen (leaves nothing in the ground)
- Can be used with cone penetrometer or drill rig

HydroPunch® II

- Collects floating layer and ground water
- Replaceable cones and screens are left in ground (note: screens may be retrievable)
- Stronger for tough duty; used with drill ring

F-09

Monitoring Well Installation

ARCADIS
Infrastructure, environment, facilities

Imagine the result

Monitoring Well Installation

Rev. #: 4

Rev Date: February 22, 2013

I. Scope and Application

The procedures set out herein are designed to produce standard groundwater monitoring wells suitable for: (1) groundwater sampling, (2) water level measurement, (3) bulk hydraulic conductivity testing of formations adjacent to the open interval of the well.

Monitoring well boreholes in unconsolidated (overburden) materials are typically drilled using the hollow-stem auger drilling method. Other drilling methods that are also suitable for installing overburden monitoring wells, and are sometimes necessary due to site-specific geologic conditions, include: drive-and-wash, spun casing, Rotasonic, dual-rotary (Barber Rig), and fluid/mud rotary with core barrel or roller bit. Direct-push techniques (e.g., Geoprobe or cone penetrometer) and driven well points may also be used in some cases within the overburden. Monitoring wells within consolidated materials such as bedrock are commonly drilled using water-rotary (coring or tri-cone roller bit), air rotary or Rotasonic methods. The drilling method to be used at a given site will be selected based on site-specific consideration of anticipated drilling/well depths, site or regional geologic knowledge, type of monitoring to be conducted using the installed well, and cost.

No oils or grease will be used on equipment introduced into the boring (e.g., drill rod, casing, or sampling tools). No polyvinyl chloride (PVC) glue/cement will be used in constructing or retrofitting monitoring wells that will be used for water-quality monitoring. No coated bentonite pellets will be used in the well drilling or construction process. Specifications of materials to be installed in the well will be obtained prior to mobilizing onsite, including:

- well casing;
- bentonite;
- sand; and
- grout.

Well materials will be inspected and, if needed, cleaned prior to installation.

II. Personnel Qualifications

Monitoring well installation activities will be performed by persons who have been trained in proper well installation procedures under the guidance of an experienced

field geologist, engineer, or technician. Where field sampling is performed for soil or bedrock characterization, field personnel will have undergone in-field training in soil or bedrock description methods, as described in the appropriate SOP(s) for those activities.

III. Equipment List

The following materials will be available during soil boring and monitoring well installation activities, as required:

- Site Plan with proposed soil boring/well locations;
- Work Plan or Field Sampling Plan (FSP), and site Health and Safety Plan (HASP);
- personal protective equipment (PPE), as required by the HASP;
- traffic cones, delineators, caution tape, and/or fencing as appropriate for securing the work area, if such are not provided by drillers;
- appropriate soil sampling equipment (e.g., stainless steel spatulas, knife);
- soil and/or bedrock logging equipment as specified in the appropriate SOPs;
- appropriate sample containers and labels;
- drum labels as required for investigation derived waste handling;
- chain-of-custody forms;
- insulated coolers with ice, when collecting samples requiring preservation by chilling;
- photoionization detector (PID) or flame ionization detector (FID);
- ziplock style bags;
- water level or oil/water interface meter;
- locks and keys for securing the well after installation;

- decontamination equipment (bucket, distilled or deionized water, cleansers appropriate for removing expected chemicals of concern, paper towels);
- field notebook.

Prior to mobilizing to the site, ARCADIS personnel will contact the drilling subcontractor or in-house driller (as appropriate) to confirm that appropriate sampling and well installation equipment will be provided. Specifications of the sampling and well installation equipment are expected to vary by project, and so communication with the driller will be necessary to ensure that the materials provided will meet the project objectives. Equipment typically provided by the driller could include:

- drilling equipment required by the American Society of Testing and Materials (ASTM) D 1586, when performing split-spoon sampling;
- disposable plastic liners, when drilling with direct-push equipment;
- drums for investigation derived waste;
- drilling and sampling equipment decontamination materials;
- decontamination pad materials, if required; and
- well construction materials.

IV. Cautions

Prior to beginning field work, underground utilities in the vicinity of the drilling areas will be delineated by the drilling contractor or an independent underground utility locator service. See separate SOP for utility clearance.

Some regulatory agencies require a minimum annular space between the well or permanent casing and the borehole wall. When specified, the minimum clearance is typically 2 inches on all sides (e.g., a 2-inch diameter well requires a 6-inch diameter borehole). In addition, some regulatory agencies have specific requirements regarding grout mixtures. Determine whether the oversight agency has any such requirements prior to finalizing the drilling and well installation plan.

If dense non-aqueous phase liquids (DNAPL) are known or expected to exist at the site, refer to the DNAPL Contingency Plan SOP for additional details regarding drilling and well installation to reduce the potential for inadvertent DNAPL remobilization.

Similarly, if light non-aqueous phase liquids (LNAPLs) are known or expected to be present as “perched” layers above the water table, refer to the DNAPL Contingency Plan. Follow the general provisions and concepts in the DNAPL contingency plan during drilling above the water table at known or expected LNAPL sites.

Avoid using drilling fluids or materials that could impact groundwater or soil quality, or could be incompatible with the subsurface conditions.

Similarly, consider the material compatibility between the well materials and the surrounding environment. For example, PVC well materials are not preferred when DNAPL is present. In addition, some groundwater conditions leach metals from stainless steel.

Water used for drilling and sampling of soil or bedrock, decontamination of drilling/sampling equipment, or grouting boreholes upon completion will be of a quality acceptable for project objectives. Testing of water supply should be considered.

Specifications of materials used for backfilling bore hole will be obtained, reviewed and approved to meet project quality objectives. Bentonite is not recommended where DNAPLs are likely to be present. In these situations, neat cement grout is preferred.

No coated bentonite pellets will be used in monitoring well construction, as the coating could impact the water quality in the completed well.

Monitoring wells may be installed with Schedule 40 polyvinyl chloride (PVC) to a maximum depth of 200 feet below ground surface (bgs). PVC monitoring wells between 200 and 400 feet total depth will be constructed using Schedule 80 PVC. Monitoring wells deeper than 400 feet will be constructed using steel.

V. Health and Safety Considerations

Field activities associated with monitoring well installation will be performed in accordance with a site-specific HASP, a copy of which will be present on site during such activities.

VI. Procedures

The procedures for installing groundwater monitoring wells are presented below:

Hollow-Stem Auger, Drive-and-Wash, Spun Casing, Fluid/Mud Rotary, Rotasonic, and Dual-Rotary Drilling Methods

1. Locate boring/well location, establish work zone, and set up sampling equipment decontamination area.

2. Advance boring to desired depth. Collect soil and/or bedrock samples at appropriate interval as specified in the Work Plan and/or FSP. Collect, document, and store samples for laboratory analysis as specified in the Work Plan and/or FSP. Decontaminate equipment between samples in accordance with the Work Plan and/or FSP. A common sampling method that produces high-quality soil samples with relatively little soil disturbance is the ASTM D 1586 - Standard Test Method for Penetration Test and Split-Barrel Sampling of Soils. Split-spoon samples are obtained during drilling using hollow-stem auger, drive-and-wash, spun casing, and fluid/mud rotary. Rotasonic drilling produces large-diameter soil cores that tend to be more disturbed than split-spoon samples due to the vibratory action of the drill casing. Dual-rotary removes cuttings by compressed air and allows only a general assessment of geology. High-quality bedrock samples can be obtained by coring.

3. Describe each soil or bedrock sample as outlined in the appropriate SOP. Record descriptions in the field notebook and/or personal digital assistant (PDA). It should be noted that PDA logs must be electronically backed up and transferred to a location accessible to other project team members as soon as feasible to retain and protect the field data. During soil boring advancement, document all drilling events in field notebook, including blow counts (number of blows required to advance split-spoon sampler in 6-inch increments) and work stoppages. Blow counts will not be available if Rotasonic, dual-rotary, or direct-push methods are used. When drilling in bedrock, the rate of penetration (minutes per foot) is recorded.

4. If it is necessary to install a monitor well into a permeable zone below a confining layer, particularly if the deeper zone is believed to have water quality that differs significantly from the zone above the confining layer, then a telescopic well construction should be considered. In this case, the borehole is advanced approximately 3 to 5 feet into the top of the confining layer, and a permanent casing (typically PVC, black steel or stainless steel) is installed into the socket drilled into the top of the confining layer. The casing is then grouted in place. The preferred methods of grouting telescoping casings include: pressure-injection grouting using an inflatable packer installed temporarily into the base of the casing, such that grout is injected out the bottom of the casing until it is observed at ground surface outside the casing; displacement-method grouting (also known as the Halliburton method), which entails filling the casing with grout and displacing the grout out the bottom of the casing by pushing a drillable plug, typically made of wood to the bottom of the casing, following by

tremie grouting the remainder of the annulus outside the casing; or tremie grouting the annulus surrounding the casing using a tremie pipe installed to the base of the borehole. In all three cases, the casing is grouted to the ground surface, and the grout is allowed to set prior to drilling deeper through the casing. Site-specific criteria and work plans should be created for the completion of non-standard monitoring wells, including telescopic wells.

5. In consolidated formations such as competent bedrock, a monitoring well may be completed with an open borehole interval without a screen and sandpack. In these cases, the borehole is advanced to the targeted depth of the top of the open interval. A permanent casing is then grouted in place following the procedures described in Step 4 above. After the grout sets, the borehole is advanced by drilling through the permanent casing to the targeted bottom depth of the open interval, which then serves as the monitoring interval for the well. If open-borehole interval stability is found to be questionable or if a specific depth interval is later selected for monitoring, a screened monitoring well may later be installed within the open-borehole interval, depending on the annular space and well diameter requirements.

6. Before installing a screened well – or after drilling an open-bedrock well –, it is important to confirm that the borehole has been advanced into the saturated zone. This is particularly important for wells installed to monitor the water table and/or the shallow saturated zone, as the capillary fringe may cause soils above the water table to appear saturated. If one or more previously installed monitoring wells exist nearby, use the depth to water at such well(s) to estimate the water-table depth at the new borehole location.

   To verify that the borehole has been advanced into the saturated zone, it is necessary to measure the water level in the borehole. For boreholes drilled without using water (e.g., hollow-stem auger, cable-tool, air rotary, air hammer), verify the presence of groundwater (and /or LNAPL, if applicable) in the borehole using an electronic water level probe, oil-water interface probe, or a new or decontaminated bailer. For boreholes drilled using water (e.g., drive and wash, spun-casing with roller-bit wash, rotasonic, or water rotary with core or roller bit), monitor the water level in the borehole as it re-equilibrates to the static level. In low-permeability units like clay, fine-grained glacial tills, shale and other bedrock formations, it may be necessary to wait overnight to allow the water level to equilibrate. To the extent practicable, ensure that the depth of the well below the apparent water table is deep enough so that the installed well can monitor groundwater year-round, accounting for seasonal water-table fluctuations. In most cases, the well should be installed at least five feet below

the water-table depth, determined as described above. When in doubt, err on the side of slightly deeper well installation.

If necessary, the borehole should be drilled deeper to ensure that the well may intersects the water table or a permeable water-bearing zone.

7. Upon completing the borehole to the desired depth, if a screened well construction is desired, install the monitoring well by lowering the screen and casing assembly with sump through the augers or casing. Monitoring wells typically will be constructed of 2-inch-diameter, flush-threaded PVC or stainless steel slotted well screen and blank riser casing. Smaller diameters may be used if wells are installed using direct-push methodology or if multiple wells are to be installed in a single borehole. The screen length will be specified in the Work Plan or FSP based on regulatory requirements and specific monitoring objectives. Monitoring well screens are usually 5 to 10 feet long, but may be up to 25 feet long in very low permeability, thick geologic formations. The screen length will depend on the purpose for the well and the objectives of the groundwater investigation. Typically, the slot size will be 0.010 inch and the sand pack will be 20-40, Morie No. 0, or equivalent. In very fine-grained formations where sample turbidity needs to be minimized, it may be preferred to use a 0.006-inch slot size and 30-65, Morie No. 00, or equivalent sand pack. Alternatively, where monitoring wells are installed in coarse-grained deposits and higher well yield is required, a 0.020-inch slot size and 10-20, Morie No. 1, or equivalent sand pack may be preferred. To the extent practicable, the slot size and sand pack gradation may be predetermined in the Work Plan or FSP based on site-specific grain-size analysis or other geologic considerations or monitoring objectives. A blank sump may be attached below the well screen if the well is being installed for DNAPL recovery/monitoring purposes. If so, the annular space around the sump will be backfilled with neat cement grout to the bottom of the well screen prior to placing the sand pack around the screen. A blank riser will extend from the top of the screen to approximately 2.5 feet above grade or, if necessary, just below grade where conditions warrant a flush-mounted monitoring well. For wells greater than 50 feet deep, centralizers may be desired to assist in centralizing the monitoring well in the borehole during construction.

8. When the monitoring well assembly has been set in place and the grout has been placed around the sump (if any), place a washed silica sand pack in the annular space from the bottom of the boring to a height of 1 to 2 feet above the top of the well screen. The sand pack is placed and drilling equipment extracted in increments until the top of the sand pack is at the appropriate depth. The sand pack will be consistent with the screen slot size and the soil particle size in

the screened interval, as specified in the Work Plan or FSP. A hydrated bentonite seal (a minimum of 2 feet thick) will then be placed in the annular space above the sand pack. If non-hydrated bentonite is used, the bentonite should be permitted to hydrate in place for a minimum of 8 hours, or the manufacturers recommended hydration time, whichever is longer, before proceeding. No coated bentonite pellets will be used in monitoring well drilling or construction. Potable water may be added to hydrate the bentonite if the seal is above the water table. Monitor the placement of the sand pack and bentonite with a weighted tape measure. During the extraction of the augers or casing, a cement/bentonite or neat cement grout will be placed in the annular space from the bentonite seal to a depth approximately 2 feet bgs. The grout seal placed in the annular space of the well will be allowed to cure for a minimum of 24 hours prior to placement of the final outer protective casing.

9. Place a locking, steel protective casing (extended at least 1.5 feet below grade and 2.5 feet above grade) over the riser casing and secure with a neat cement seal. Alternatively, for flush-mount completions, place a steel curb box with a bolt-down lid over the riser casing and secure with a neat cement seal. In either case, the cement seal will extend approximately 1.5 to 2.0 feet below grade. A cement pad with a minimum 4-inch thickness will extend laterally at least 1.5 feet in all directions from the protective casing for a 2-inch diameter well, and should slope gently away to promote drainage away from the well (the pad should be 4 feet by 4 feet by 6 inches for a 4-inch diameter well). Monitoring wells will be labeled with the appropriate designation on both the inner and outer well casings or inside of the curb box lid.

   When an above-grade completion is used, the PVC riser will be sealed using an expandable locking plug and the top of the well will be vented by drilling a small-diameter (1/8 inch) hole near the top of the well casing or through the locking plug, or by cutting a vertical slot in the top of the well casing. When a flush-mount installation is used, the PVC riser will be sealed using an unvented, expandable locking plug.

10. During well installation, record construction details and actual measurements relayed by the drilling contractor and tabulate materials used (e.g., screen and riser footages; bags of bentonite, cement, and sand) in the field notebook.

11. After completing the well installation, lock the well, clean the area, and dispose of materials in accordance with the procedures outlined in Section VII below.

Direct-Push Method

The direct-push drilling method may also be used to complete soil borings and install monitoring wells. Examples of this technique include the Diedrich ESP vibratory probe system, GeoProbe®, or AMS Power Probe® dual-tube system. Environmental probe systems typically use a hydraulically operated percussion hammer. Depending on the equipment used, the hammer delivers 140- to 350-foot pounds of energy with each blow. The hammer provides the force needed to penetrate very stiff/medium dense soil formations. The hammer simultaneously advances an outer steel casing that contains a dual-tube liner for sampling soil. The outside diameter (OD) of the outer casing ranges from 1.75 to 2.4 inches and the OD of the inner sampling tube ranges from 1.1 to 1.8 inches. The outer casing isolates shallow layers and permits the unit to continue to probe at depth. The double-rod system provides a borehole that may be tremie-grouted from the bottom up. Alternatively, the inside diameter (ID) of the steel casing provides clearance for the installation of small-diameter (e.g., 0.75- to 1-inch ID) micro-wells. The procedures for installing monitoring wells in soil using the direct-push method are described below.

1. Locate boring/well location, establish work zone, and set up sample equipment decontamination area.

2. Advance soil boring to designated depth, collecting samples at intervals specified in the Work Plan. Samples will be collected using dedicated, disposable, plastic liners. Describe samples in accordance with the procedures outlined in Step 3 above. Collect samples for laboratory analysis as specified in the Work Plan and/or FSP.

3. Upon advancing the borehole to the desired depth, install the micro-well through the inner drill casing. The micro-well will consist of approximately 1-inch ID PVC or stainless steel slotted screen and blank riser. The sand pack, bentonite seal, and cement/bentonite grout will be installed as described, where applicable, in Step 7 and 8 above.

4. Install protective steel casing or flush-mount, as appropriate, as described in Step 9 above. During well installation, record construction details and tabulate materials used.

5. After completing the well installation, lock the well, clean the area, and dispose of materials in accordance with the procedures outlined in Section VII below.

Driven Well Point Installation

Well points will be installed by pushing or driving using a drilling rig or direct-push rig, or hand-driven where possible. The well point construction materials will consist of a

1- to 2-inch-diameter threaded steel casing with either 0.010- or 0.020-inch slotted stainless steel screen. The screen length will vary depending on the hydrogeologic conditions of the site. The casings will be joined together with threaded couplings and the terminal end will consist of a steel well point. Because they are driven or pushed to the desired depth, well points do not have annular backfill materials such as sand pack or grout.

VII. Waste Management

Investigation-derived wastes (IDW), including soil cuttings and excess drilling fluids (if used), decontamination liquids, and disposable materials (well material packages, PPE, etc.), will be placed in clearly labeled, appropriate containers, or managed as otherwise specified in the Work Plan, FSP, and/or IDW management SOP.

VIII. Data Recording and Management

Drilling activities will be documented in a field notebook. Pertinent information will include personnel present on site, times of arrival and departure, significant weather conditions, timing of well installation activities, soil descriptions, well construction specifications (screen and riser material and diameter, sump length, screen length and slot size, riser length, sand pack type), and quantities of materials used. In addition, the locations of newly-installed wells will be documented photographically or in a site sketch. If appropriate, a measuring wheel or engineer's tape will be used to determine approximate distances between important site features.

The well or piezometer location, ground surface elevation, and inner and outer casing elevations will be surveyed using the method specified in the site Work Plan. Generally, a local baseline control will be set up. This local baseline control can then be tied into the appropriate vertical and horizontal datum, such as the National Geodetic Vertical Datum of 1929 or 1988 and the State Plane Coordinate System. At a minimum, the elevation of the top of the inner casing used for water-level measurements should be measured to the nearest 0.01 foot. Elevations will be established in relation to the National Geodetic Vertical Datum of 1929. A permanent mark will be placed on top of the inner casing to mark the point for water-level measurements.

IX. Quality Assurance

All drilling equipment and associated tools (including augers, drill rods, sampling equipment, wrenches, and any other equipment or tools) that may have come in contact with soil will be cleaned in accordance with the procedures outlined in the appropriate SOP. Well materials will also be cleaned prior to well installation.

X. References

American Society of Testing and Materials (ASTM) D 1586 - *Standard Test Method for Penetration Test and Split-Barrel Sampling of Soils*.

U.S. Environmental Protection Agency, Region 4, Science and Ecosystem Support Division, 2013. Design and Installation of Monitoring Wells, SESGUID-101-R1. January.

F-10

Monitoring Well Development

ARCADIS
Infrastructure, environment, facilities

Imagine the result

Monitoring Well Development

Rev. #: 2.2

Rev. Date: March 22, 2010

I. Scope and Application

Monitoring wells (or piezometers, well points, or micro-wells) will be developed to clear them of fine-grained sediment to enhance the hydraulic connection between the well and the surrounding geologic formation. Development will be accomplished by evacuating well water by either pumping or bailing. Prior to pumping or bailing, the screened interval will be gently surged using a surge block, bailer, or inertia pump with optional surgeblock fitting as appropriate. Accumulated sediment in the bottom of the well (if present) will be removed by bailing with a bottom-loading bailer or via pumping using a submersible or inertia pump with optional surge-block fitting. Wells will also be gently brushed with a weighted brush to assist in removing loose debris, silt or flock attached to the inside of the well riser and/or screen prior to development. Pumping methods will be selected based on site-specific geologic conditions, anticipated well yield, water table depth, and groundwater monitoring objectives, and may include one or more of the following:

- submersible pump
- inertial pump (Waterra™ pump or equivalent)
- bladder pump
- peristaltic pump
- centrifugal pump

When developing a well using the pumping method, the pump (or, with inertial pumps, the tubing) is lowered to the screened portion of the well. During purging, the pump or tubing is moved up and down the screened interval until the well yields relatively clear water.

Submersible pumps have a motor-driven impeller that pushes the groundwater through discharge tubing to the ground surface. Inertial pumps have a check valve at the bottom of stiff tubing which, when operated up and down, lifts water to the ground surface. Bladder pumps have a bottom check valve and a flexible internal bladder that fills from below and is then compressed using pressurized air to force water out the top of the bladder through the discharge tubing to the ground surface. These three types of pumps have a wide range of applicability in terms of well depth and water depth.

Centrifugal and peristaltic pumps use atmospheric pressure to lift water from the well, and therefore can only be practically used where the depth to water is less than 25 feet.

II. Personnel Qualifications

Monitoring well development activities will be performed by persons who have been trained in proper well development procedures under the guidance of an experienced field geologist, engineer, or technician.

III. Equipment List

Materials for monitoring well development using a pump include the following:

- health and safety equipment, as required by the site Health and Safety Plan (HASP):
- cleaning equipment
- photoionization detector (PID) to measure headspace vapors
- pump
- polyethylene pump discharge tubing
- plastic sheeting
- power source (generator or battery)
- field notebook and/or personal digital assistant (PDA)
- graduated pails
- appropriate containers

- monitoring well keys
- water level indicator

Materials for monitoring well development using a bailer include the following:

- personal protective equipment (PPE) as required by the HASP
- cleaning equipment
- PID to measure headspace vapors
- bottom-loading bailer, sand bailer
- polypropylene or nylon rope
- plastic sheeting
- graduated pails
- appropriate containers
- keys to wells
- field notebook and/or PDA
- water level indicator
- weighted brush for well brushing

IV. Cautions

Where surging is performed to assist in removing fine-grained material from the sand pack, surging must be performed in a gentle manner. Excessive suction could promote fine-grained sediment entry into the outside of the sand pack from the formation.

Avoid using development fluids or materials that could impact groundwater or soil quality, or could be incompatible with the subsurface conditions.

In some cases it may be necessary to add potable water to a well to allow surging and development, especially for new monitoring wells installed in low permeability formations. Before adding potable water to a well, the Project Manager (PM) must be notified and the PM shall make the decision regarding the appropriateness and applicability of adding potable water to a well during well development procedures. If potable water is to be added to a well as part of development, the potable water source should be sampled and analyzed for constituents of concern, and the results evaluated by the PM prior to adding the potable water to the well. If potable water is added to a well for development purposes, at the end of development the well will be purged dry to remove the potable water, or if the well no longer goes dry then the well will be purged to remove at least three times the volume of potable water that was added.

V. Health and Safety Considerations

Field activities associated with monitoring well development will be performed in accordance with a site-specific HASP, a copy of which will be present on site during such activities.

VI. Procedure

The procedures for monitoring well development are described below. (Note: Steps 7, 8, and 10 can be performed at the same time using an inertial pump with a surge-block fitting.)

1. Don appropriate PPE (as required by the HASP).

2. Place plastic sheeting around the well.

3. Clean all equipment entering each monitoring well, except for new, disposable materials that have not been previously used.

4. Open the well cover while standing upwind of the well, remove well cap. Insert PID probe approximately 4 to 6 inches into the casing or the well headspace and cover with gloved hand. Record the PID reading in the field notebook. If the well headspace reading is less than 5 PID units, proceed; if the headspace reading is greater than 5 PID units, screen the air within the breathing zone. If the PID reading in the breathing zone is below 5 PID units, proceed. If the PID reading is above 5 PID units, move upwind from well for 5 minutes to allow the volatiles to dissipate. Repeat the breathing zone test. If the reading is still above 5 PID units, don the appropriate respiratory protection in accordance with the requirements of the HASP. Record all PID readings.

5. Obtain an initial measurement of the depth to water and the total well depth from the reference point at the top of the well casing. Record these measurements in the field log book.

6. Prior to redeveloping older wells that may contain solid particulate debris along the inside of the well casing and screen, gently lower and raise a weighted brush along the entire length of the well screen and riser to free and assist in removing loose debris, silt or flock. Perform a minimum of 4 “passes” along the screened and cased intervals of the well below the static water level in the well. Allow the resulting suspended material to settle for a minimum of one day prior to continuing with redevelopment activities.

7. Lower a surge block or bailer into the screened portion of the well. Gently raise and lower the surge block or bailer within the screened interval of the well to force water in and out of the screen slots and sand pack. Continue surging for 15 to 30 minutes.

8. Lower a bottom-loading bailer, submersible pump, or inertia pump tubing with check valve to the bottom of the well and gently bounce the bailer, pump, pump tubing on the bottom of the well to collect/remove accumulated sediment, if any. Remove and empty the bailer, if used. Repeat until the bailed/pumped water is free of excessive sediment and the bottom of the well feels solid. Alternatively, measurement of the well depth with a water level indicator can be used to verify that sediment and/or silt has been removed to the extent practicable, based on a comparison with the well installation log or previous measurement of total well depth.

9. After surging the well and removing excess accumulated sediment from the bottom of the well, re-measure the depth-to-water and the total well depth from the reference point at the top of the well casing. Record these measurements in the field log book.

10. Remove formation water by pumping or bailing. Where pumping is used, measure and record the pre-pumping water level. Operate the pump at a relatively constant rate. Measure the pumping rate using a calibrated container and stop watch, and record the pumping rate in the field log book. Measure and record the water level in the well at least

once every 5 minutes during pumping. Note any relevant observations in terms of water color, visual level of turbidity, sheen, odors, etc. Pump or bail until termination criteria specified in the Field Sampling Plan (FSP) are reached. Record the total volume of water purged from the well.

11. If the well goes dry, stop pumping or bailing. Note the time that the well went dry. After allowing the well to recover, note the time and depth to water. Resume pumping or bailing when sufficient water has recharged the well.

12. Contain all water in appropriate containers.

13. When complete, secure the lid back on the well.

14. Place disposable materials in plastic bags for appropriate disposal and decontaminate reusable, downhole pump components and/or bailer.

VII. Waste Management

Materials generated during monitoring well installation and development will be placed in appropriate labeled containers and disposed of as described in the Work Plan or Field Sampling Plan.

VIII. Data Recording and Management

Well development activities will be documented in a proper field notebook and/or PDA. Pertinent information will include personnel present on site; times of arrival and departure; significant weather conditions; timing of well development activities; development method(s); observations of purge water color, turbidity, odor, sheen, etc.; purge rate; and water levels before and during pumping.

IX. Quality Assurance

All reused, non-disposable, downhole well development equipment will be cleaned in accordance with the procedures outlined in the Field Equipment Cleaning-Decontamination SOP.

X. References

Not applicable.

F-11

Well Development – Water Jetting

ARCADIS
Infrastructure, environment, facilities

Imagineÿtheÿresult

Well Development – Water Jetting
Standard Operating Procedure

Rev. #: 1

Rev Date: July 2, 2010

1. Scope and Application

This standard operating procedure (SOP) provides an overview of jetting with water as a method of well development. While the goal of groundwater sampling is to obtain water samples that are representative of natural, undisturbed hydrogeologic conditions, all drilling methods disturb geologic materials around the well bore to some extent. Development of remediation wells (monitoring wells, piezometers, injection wells, extraction wells) is needed to repair (to the extent practicable) damage to the formation caused by drilling, and to remove fine-grained sediments and drilling fluids introduced during the drilling process. Well development enhances the hydraulic connection between the well and the surrounding formation, ensuring that the screen transmits groundwater that is representative of the surrounding formation. Periodic redevelopment may also be necessary to improve the operation of extraction or injection wells.

The ultimate goal of any development technique is to create a filter pack that is coarsest near the well screen and becomes progressively finer until it blends with the native formation. The ideal development would merge the filter pack seamlessly into the formation, without a noticeable change in grain size.

Development through jetting introduces high velocity water into the well screen while simultaneously evacuating water from the well (ideally maintaining an in-well water level that is equal to or below the static water level, but always less than 20 percent of the available head space in the well). Prior to and/or following jetting, the screened interval can be gently surged using a surge block, bailer, or inertia pump with optional surge block fitting to remove fines freed from filter pack during the jetting process.

Design and selection of the appropriate jetting equipment and delivery pressure will be based on site-specific parameters (well construction details), tubing, and pump specifications. The disposal of investigation derived waste (IDW) generated during the jetting process must also be taken into consideration.

In general, jetting involves lowering either single or multiple small diameter pipe(s) or tube(s) equipped with nozzles into the well screen and injecting a high velocity horizontal stream of water through the pipe(s) into the screen openings. The jets are moved vertically along the screened interval and rotated, if needed, to effectively address the entire screen surface area. Typical jetting assemblies include a submersible pump to extract the injected water and maintain the static water level, but alternate removal methods (air lifting, centrifugal pump) are acceptable.

Jetting tools usually have two to four nozzles; however, site conditions and well diameter will ultimately dictate the number of nozzles used at a specific well. Nozzle

orifice sizes are selected to produce velocities between approximately 100 and 300 feet per sec (ft/sec). The injected (and extracted) flow into the well and the approximate pressure delivered by the jetting pump to achieve the target jetting velocities can be determined by considering the following:

- screen material and opening configuration
- nozzle specifications
- pressure losses from pump manifold to nozzles
- pump and tubing pressure limitations
- screen exit velocity
- IDW generation and/or recirculation options.

The attached jetting design tool (see Section X. References) can be used to estimate the target manifold pressure and injection/extraction flow rate for a specific remediation well.

II. Personnel Qualifications

Well development activities will be performed by persons who have been trained in proper field procedures. Well development activities will be performed under the guidance of an experienced field geologist, engineer, or technician.

III. Equipment List

General materials for well development include:

- personal protective equipment (PPE) and any other safety equipment required by the site-specific Health and Safety Plan (HASP)
- cleaning equipment
- water level meter and/or oil/water interface probe
- water quality meter that is capable of recording pH, temperature, conductivity, and turbidity (optional)

- photoionization detector (PID) to measure headspace vapors (recommended; may be required by the site-specific HASP)
- plastic sheeting
- graduated pails
- drum(s) or tank(s) to contain purge water, and equipment to move the container(s)
- field notebook
- well construction logs (or summary table) indicating completed well depths and screened intervals
- monitoring well keys.

Materials needed specifically for development by jetting include:

- Down-hole jetting assembly consisting of:
  - Two or three jetting nozzles pointed outward in the horizontal plane.
    - Select jet nozzles rated for velocities between 150 and 300 ft/sec. Higher velocities may damage the well, whereas lower velocities will be less effective at penetrating the filter pack.
    - Nozzles should spray in a wide angle horizontal fan (e.g., 145°). An array of three nozzles with overlapping fans is preferred. If the combined spray arc is not a full 360°, the assembly will need to be rotated throughout the well development process.
    - The nozzles must be equally spaced to hydraulically balance the jetting tool.
    - Since a larger orifice will require a higher injection rate to achieve the same velocity, small-orifice jets (approximately 0.016 inch to 0.065 inch in diameter) are preferred.
  - A rate-controllable submersible pump (or alternate pumping device) attached below the jetting nozzles (or above the jetting nozzles, if jetting at the very bottom of the screen is required).
    - The pump capacity should be greater than the anticipated jetting flow required to jet at the target velocity (for the full array of jets).
  - A flexible rubber flange (or collar) attached between the jetting nozzles and the submersible pump.
    - The flange prevents flow from the jet to the pump from occurring within the well casing, thereby forcing the flow through the screen and filter pack.
    - Flanges should be constructed of flexible rubber and sized appropriately to slide freely up and down inside the well casing, yet provide a partial seal against vertical flow.

- Associated tubing and control wire bundled together (e.g., with zip ties or heat shrink plastic wrapping). The jetting assembly must be sufficiently rigid and bundled to minimize friction between the well casing and the jetting tool and allow vertical movement and rotation (if necessary). Ease of jetting tool movement within the well can become a concern in small (i.e., 2-inch) diameter wells if the jetting tool is not properly designed.

- Above-grade jetting assembly consisting of:
  - potable water supply (e.g., 250-gallon water tote)
  - above-grade water pump (e.g., booster pump) and recirculation or pressure relief line into supply water tank, if needed
  - injection manifold consisting of the following:
    - poly vinyl chloride (PVC) or steel pipe, with an input connection from the water pump and branches to each jetting line (all piping and tubing must be pressure rated to withstand jetting pressures)
    - pressure gage
    - gate valves on each output line
  - Storage tank for extracted water
  - Filter unit (if recirculation is used)
    - If recirculation is being used, sediment must be removed prior to re-injection.
    - Sediment may erode nozzle orifices (thereby reducing delivered pressure), harm the jetting pump, and abrade screen material,

- Power supplies for jetting pump and submersible pump.

IV. Cautions

- Delivery pressures greater than 150 pounds per square inch (psi) are often required to achieve effective jetting velocities. All tubing/piping, connections, and pumps should be rated for the anticipated delivery pressures, and should be inspected for damage prior to and periodically during use.

- Care should be taken when testing the jetting tool above ground. Similar to a pressure washer, high pressure water exiting the jets may pose a risk if it comes into direct contact with skin.

- The type of screen opening greatly affects what percentage of the jetted water reaches the formation surrounding the filter pack (i.e., v-shaped continuous slot screens transfer the high velocity stream more effectively than louvered screens).

- Water exiting the jetting tool should not exceed the recommended screen exit velocity of 0.05 ft/sec to prevent possible damage to the well screen.

- Continuous movement of the jetting tool is recommended to minimize formation of cavities within the filter pack and to protect the screen.

- Water pressure should not exceed 100 psi when jetting PVC screens.

- Only use sediment-free water with the jetting tool to minimize damage to the well screen from abrasive particles, avoid erosion of the nozzle orifice (which could cause a reduction in nozzle velocity), and protect the jetting pump.

- Avoid using development fluids or materials that could impact groundwater or soil quality, or could be incompatible with the subsurface conditions.

V. Health and Safety Considerations

Field activities associated with well development by jetting will be performed in accordance with the site-specific HASP, a copy of which will be present onsite during such activities. Note that additional precautions may be required to account for the use of pressurized equipment or handling large storage vessels.

VI. Procedure

The procedures for developing a well using the jetting method are outlined below. These procedures are applicable to wells that are screened primarily in clay and silt formations.

1. Don appropriate PPE (as required by the HASP).

2. Using a non-phosphate cleaner (e.g., Alconox) and potable water, clean and double rinse all non-dedicated equipment that will enter the well (refer to separate equipment cleaning procedures where applicable).

3. Breathing zone testing is recommended (to be determined by the project team). If required:

    a. Open the well cover while standing upwind of the well; remove the well cap. Insert the PID probe approximately 4 to 6 inches into the casing or the well headspace; cover with gloved hand.

    b. Record the PID reading in the field notebook.

    c. If the well headspace reading is less than 5 PID units, proceed; if the headspace reading is greater than 5 PID units, screen the air within the breathing zone. If the PID reading in the breathing zone is below 5 PID

units, proceed. If the PID reading is above 5 PID units, move upwind from the well for 5 minutes to allow the volatiles to dissipate, then repeat the breathing zone test. If the reading is still above 5 PID units, don the appropriate respiratory protection in accordance with the requirements of the HASP. Record all PID readings.

4. Measure the depth to water and total well depth. Check for the presence of non-aqueous phase liquid (NAPL). *If NAPL is present do not continue development until consulting with the task manager (or TKI specialist).* Compare the well depth to the as-built construction details. Calculate the volume of water in the well casing.

5. Hydraulic testing is recommended to evaluate the effectiveness of the jetting process (implementation will be determined by the project team). If hydraulic testing is to be performed, the following process can be used:

    a. Lower a pump into the well and begin pumping while monitoring the water level in the well.

    b. Adjust the pumping rate to achieve steady flow from the well, with drawdown in the well at 20 to 30 percent of the original water column.

    c. Record this flow rate and drawdown and calculate the initial specific capacity: $SC = \frac{\text{F}\square\square\ (\square)}{\text{d}\square\square\ \text{d}\square\square\ \square\ (\Delta\square)}$

6. Determine final jetting/purging parameters and set-up:

    a. Calculate the operational jetting pressure (manifold gage reading) to achieve the target jet velocity (i.e., 150 to 300 ft/sec) based on the jet nozzle manufacturer's specifications (e.g., 200 psi at 0.5 gallons per minute [gpm]), tubing losses, and equipment pressure rating. See attached calculation worksheet.

    b. Water recirculation should not be completed unless approved by the project manager. Recirculation of sediment-laden water may damage the well screen or jetting pump.

    c. Lower the jetting tool into the well. Check that the swabbing flange is loose enough to permit the tool to move up and down inside the well casing without significant effort.

    d. Place a water level meter into the well to monitor the water level during development.

7. To maintain the static water level in the well, the rate of water extraction must equal or exceed the rate of injection. A water level above baseline will drive fines suspended in the water column into the formation and therefore decrease the effectiveness of development. Carefully monitor the water level

to insure that it does not exceed 20 percent of the available head space in the well.

8. Jet and purge the saturated portion of the well screen in 2-foot increments, as follows:

    a. Start jetting in the bottom 2-foot interval of the well screen (or as close to the bottom of the screen as practical, based on the jetting assembly). While jetting:

        i. Pump from beneath (or above) the jetting tool at a rate sufficient to maintain the water-level in the well at or below the static water level.

        ii. Gently swab the well while pumping by slowly moving the jetting tool up and down the well screen at no greater than 0.5 ft/sec. Vigorous surging is not appropriate. Do not reverse the up/down stroke suddenly.

        iii. Hold the jetting tool loosely and away from the body. If jetting/surging rates are imbalanced or a filter pack blockage prevents flow, the tool may push upward or downward. Do not force the tool to remain stationary; adjust jetting/surging rates as needed.

        iv. Do not let the tool remain in one position for longer than a few seconds.

    b. Continue jetting in the 2-foot interval for 10 minutes, rotating the tool (if necessary) and covering the well screen interval multiple times.

    c. Repeat steps 8a through 8b in the next 2-foot interval of screen until the entire length of the saturated screen interval has been developed.

    d. Sediment loading and turbidity of the extracted water should improve throughout the jetting process. Visual observations of the sediment and turbidity should be recorded in the field notes or the well development form (see Section X, References). The project team may opt to record water quality parameters (temperature, conductivity, pH, turbidity) during development.

9. Monitor and record water use (i.e., volume of potable water injected and volume of water purged by pumping) throughout the development process. Increasing the extraction rate or decreasing the injection rate may be necessary to prevent the water level in the well from rising above static conditions or to prevent the well from going dry.

10. After development, measure the depth to water and the total well depth, and check for the presence of non-aqueous phase liquid (NAPL). Confirm that the total depth of the well matches the as-built well depth within a reasonable tolerance. If a discrepancy exists, note it, and evaluate it to the degree feasible. Continue development if necessary.

11. If hydraulic testing was completed prior to development, a test should be completed at the end of development activities to ascertain the level of improvement (see Step 5). Additional development may be needed if the well does not meet design criteria.

12. When complete, re-secure the well cover.

13. Using a non-phosphate cleaner (e.g., Alconox) and potable water, clean and double rinse all non-dedicated equipment that entered the well (refer to separate equipment cleaning procedures where applicable). Place disposable materials in plastic bags for appropriate disposal, and decontaminate reusable, downhole pump components and/or bailer.

VII. Waste Management

IDW generated during well development may include disposable equipment and PPE, purged groundwater, and water associated with equipment cleaning. All disposable and liquid waste should be handled and disposed in accordance with project plans and applicable regulations.

VIII. Data Recording and Management

Well development activities will be documented in a proper field notebook and/or Personal Digital Assistant (PDA). Pertinent information will include:

- General Field Notes:
  - personnel present onsite
  - times of arrival and departure
  - significant weather conditions
  - timing of well development activities
- Jetting Field Notes:
  - observations of NAPL
  - manifold pressure
  - water levels before and during testing
  - observations of purge water color, turbidity, odor, and sheen over time
  - purge rate
  - initial and final total depth of well
  - hydraulic testing parameters (if specified by project technical lead)

IX. References

Jetting Design Tool

Well Development Form

F-12

Monitoring Well Integrity Survey

ARCADIS
Infrastructure, environment, buildings

Imagine the result

Monitoring Well Integrity Survey

Rev. #: 0

Rev Date: February 24, 2009

I. Scope and Application

This Standard Operating Procedure (SOP) specifies the procedures for performing inventories of existing monitoring wells. This SOP also applies to piezometers that are constructed analogous to monitoring wells. For simplicity, such piezometers are also referred to as monitoring wells for the remainder of this document.

Monitoring well inventories are periodically conducted to assess the integrity of existing monitoring wells and to identify the need for repairs, replacement of parts, or replacement of wells that are determined to no longer be usable. A well inventory involves an inspection of the overall condition of the well, comparison of measurable quantities (e.g., riser stickup relative to grade and total depth), general verification of survey coordinates and elevation, and measurement of depth to water in the well.

II. Personnel Qualifications

All personnel shall meet the requirements of the site-specific Health and Safety Plan (HASP).

The Project Manager is responsible for ensuring that the activities described herein are conducted in accordance with this SOP and any other appropriate procedures. This will be accomplished through staff training and by maintaining quality assurance/quality control (QA/QC).

The Field Manager is responsible for periodic observation of field activities and review of field generated documentation associated with this SOP. The Field Manager is also responsible for implementation of corrective action if well conditions necessitate them.

III. Equipment List

The following materials will be available, as required, during performance of a monitoring well inventory:

- Health and safety equipment (as required by the site-specific Health and Safety Plan)
- Ruler or tape measure
- Water level indicator and/or interface probe
- Indelible pen

- Paint pen
- Well keys
- Wrenches for accessing flush-mount well covers
- Cleaning equipment
- Well construction information
- Field notebook or Personal Digital Assistant (PDA)

If feasible, a supply of typical replacement parts (e.g., locks, bolts, and well caps) should be available to enable immediate usage as necessary.

IV. Cautions

It is important to confirm the correct identity of wells, particularly when they are installed in a cluster. In these cases, however, the wells usually differ significantly in terms of depth below grade. During the well integrity survey, verify that all wells are properly labeled by comparing their measured depth to the reported depth as installed. If the well identity is incorrectly labeled or not labeled, provide a clear, correct label using an indelible pen on the inside of the steel protective cover for the well, or on the outside of the steel protective cover using a paint pen.

V. Health and Safety Considerations

Field activities associated with monitoring well installation will be performed in accordance with a site-specific HASP, a copy of which will be present on site during such activities. Care should be taken using tools to access flush-mount curb boxes. Wells in or near roadways must not be accessed without proper traffic cones and flagging. Access to wells containing chemicals of concern may pose a hazard of chemical exposure.

VI. Procedure

The typical procedure for assessing the integrity of a monitoring well is outlined below.

Step 1. Prior to mobilizing in the field, obtain a list of wells/piezometers to be inventoried and available information concerning their location and physical characteristics.

Step 2. Identify site and well identification number on the Well Integrity Assessment Form (Attachment 1). Record all observations on this form, supplemented by notes in the field notebook if necessary.

Step 3. Examine the well for the presence of an identification label. If absent, label the well with the appropriate well number after measuring the total depth of the well to verify that the depth matches the well number (see Step 8 below). If the well identity is incorrectly labeled or not labeled, provide a clear, correct label using an indelible pen on the inside of the steel protective cover for the well, and on the outside of the steel protective cover using a paint pen.

Step 4. Examine the surface condition of the well. Record the type of well (i.e., flush mount or above-grade stickup), condition of the well cover and surface seal. Confirm the protective casing is not bent, the PVC casing is not broken or chipped, and there is no evidence of frost heaving.

Step 5. Unlock and open the well. Record the type (e.g., PVC or stainless steel), dimensions (i.e., casing diameter and stickup relative to grade), condition of the well casing, and type of well cap. If well cap is missing, replace with available parts or record the type of cap required.

Step 6. Measure the above-grade portion of the well riser stickup and compare to the known length of the stickup measured during well installation (surveyed top of inner casing elevation minus ground surface elevation). If the difference between the observed stickup length and the known stickup length is greater than 0.1 foot, the monitoring well location and elevation should be re-surveyed.

Step 7. Locate the marked measuring point along the top of the well casing. If no mark is visible, add a mark at the highest point of the casing using an indelible pen

Step 8. Measure the depth to water and total depth of the well. For total depth measurements, account for any difference in calibration of the measuring tape on the probe (i.e., distance from part of probe that measures depth to water and the physical bottom of the probe which will measure total depth of the well). Record any obstructions encountered and a

description of the feel of the well bottom (i.e., soft due to sediment or hard).

Step 9. Compare all observations concerning the measured dimensions of the well with the listed values. Based on these results, as well as other observations concerning the condition of the well, record any appropriate recommendations on the Monitoring Well Integrity Assessment form (Attachment 1). Perform any recommended maintenance activities that can be accomplished with available equipment.

Step 10. Remove all equipment from the well. If no additional maintenance activities are to be performed, close the well and collect all personal protection equipment (PPE) and other wastes generated for disposal (see Section V below).

VII. Follow-up Activities

Depending on the results of the well inventory, several additional activities may be warranted prior to future usage of the well. Typical follow-up activities include replacement of missing parts, removal of sediment from the base of the well, re-surveying of the well, or complete replacement if the well is determined to be unusable. These activities are briefly discussed below.

As stated above, a supply of locks, bolts, and well caps should be available for immediate usage during performance of the well inventories. However, it may not be feasible to maintain a supply of all potential replacement parts due to the variety of well types in use. Therefore, a list of required replacement parts should be compiled during the performance of a well inventory event. At the conclusion of the event, the necessary replacement parts for all wells should be obtained and installed.

Sediment accumulation occurs to some degree in all monitoring wells, particularly those that are not pumped on a routine basis. If a sufficient quantity of sediment which may adversely impact future groundwater sampling activities is observed during a well inventory (i.e., a sediment accumulation of greater than one-half foot above the bottom of the well screen), activities should be taken to remove the sediment. These activities will involve the removal of sediment by either pumping or bailing the well, followed by re-measurement of the total depth of the well to confirm that the total depth is near the reported values. The removed sediment should be inspected for the presence of filter pack materials which may indicate that the well screen has been damaged. If initial efforts are unsuccessful in clearing the sediment accumulations, the well may need to be re-developed or replaced.

The measuring points marked on the well risers are utilized as a base datum in the determination of groundwater elevations. The distance of these markers from the ground surface are verified against listed values during well inventory activities. Minor variations between listed and measured values may be attributed to an uneven ground surface around the well or to enhancements to the ground surface such as paving or grading activities which may have been performed since installation of the well. Therefore, minor variations (i.e., less than 3 inches) will be discounted and existing survey information for the measuring point on the well will be assumed to be accurate. Greater discrepancies may be attributed to damage or modifications to the well, such as cutting or lengthening the well riser. In these situations, the well should be re-surveyed to establish a new datum for future groundwater elevation measurements.

Replacement or decommissioning of a well may be warranted if the well is broken, obstructed, or otherwise compromised. If the well cannot be adequately repaired and is required for future monitoring purposes, a replacement well should be installed if no suitable alternate wells are located in the vicinity.

VII. Waste Management

Materials generated during well inventory activities, including disposable equipment, will be disposed of in appropriate containers.

VIII. Data Recording and Management

Field observations will be recorded on the Well Integrity Assessment Form (Attachment A), and/or in an appropriate Field Notebook or PDA. Well integrity inventory results will be retained in the project file.

IX. Quality Assurance

To verify accurate measurements of well stickup, depth to bottom, depth to groundwater, etc., measurements must be double-checked periodically (e.g., at least one of these measurements per well should be repeated to verify accuracy).

X. References

No references apply to this SOP.

XI. Attachments

A. Well Integrity Assessment Form

WELL INTEGRITY ASSESSMENT FORM

Site Name:_____

Well I.D.:_____

Date:_____

(For each item, circle the appropriate response or fill in the blank)

Well I.D. Clearly Marked: YES NO

Well Completion: FLUSH MOUNT ABOVE-GRADE STANDPIPE

Lockable Cover: YES NO DAMAGED *(Describe below)*

Lock Present: YES NO ADDED Key Brand/Number:_____

Measuring Point Marked: YES NO ADDED

Well Riser Diameter (inches): _____

Well Riser Type: PVC Stainless Steel Other *(Describe)* _____

Surface Condition

Cement Intact: YES NO *(Describe below)*

Curb Box/Well Cover Present: YES NO DAMAGED *(Describe below)*

All Bolts Present: YES NO *(Describe below)* NOT APPLICABLE

Ground Surface Slopes

Away from Well YES NO *(Describe below)*

Well Condition

Well Cap: PVC Slip Cap Pressure-fit Cap None

Well Vent: Slot Cut in Riser Vent Hole in Cap None Not Applicable *(Flush Mount Well)*

Reported Well Riser Stickup (feet): _____*(use negative number if below grade)*

Measured Well Riser Stickup (feet): _____ *(use negative number if below grade)*

Depth to Water (feet from Top of Well Riser): _____ -*or*- DRY

Reported Total Depth of Well (feet below grade): _____

Measured Total Depth of Well (feet below grade): _____

Well Obstructed: YES NO If yes, list depth in feet from Top of Well Riser: _____

Well Bottom: SOFT *(contains sediment)* FIRM *(no sediment)*

Recommendations

Repair Concrete/Surface Completion: YES NO If yes, list date performed:_____

Re-Survey Well: YES NO If yes, list date performed:_____

Remove Sediment and Re-Measure Depth: YES NO If yes, list date performed:_____

Replace Well Cap: YES NO If yes, list date performed:_____

Replace Bolts: YES NO If yes, list date performed:_____

Replace Lock: YES NO If yes, list date performed:_____

Other/Miscellaneous Observations:

_____

_____

Inspector(s):_____

F-13

Monitoring Well Decommissioning

Imagine the result

Monitoring Well Decommissioning

Rev. #: 0

Rev Date: July 25, 2010

I. Scope and Application

This standard operating procedure (SOP) describes the procedures for decommissioning groundwater monitoring wells. Monitoring wells may be decommissioned when it is found they are no longer suitable for collection of groundwater data (i.e., groundwater quality or groundwater elevation) due to damaged and/or questionable construction, when they must be removed to avoid interference to/from other construction activities in the area, or when groundwater monitoring is no longer required at the location. The purpose for decommissioning monitoring wells no longer in use is to:

- Eliminate physical hazards associated with an out-of-use monitoring well;
- Conserve the yield and hydrostatic head of confining aquifers;
- Prevent the intermingling of separate aquifers; and
- Remove a potential conduit for the vertical migration of constituents in groundwater along the well casing.

This SOP covers the decommissioning of single-cased overburden monitoring wells when a replacement well will not be installed within the same borehole. Three potential decommissioning methods (i.e., plugging-in-place, casing removal, and overdrilling) are described below.

Although these procedures are generally applicable for the decommissioning of double-cased monitoring wells or wells installed within bedrock, in most cases a decommissioning strategy should be developed on a well-by well basis. Additional information regarding potential methods to decommission these types of wells may be found in ASTM D5299-99 - Standard Guide for Decommissioning of Ground Water Wells, Vadose Zone Monitoring Devices, Boreholes, and Other Devices for Environmental Activities.

II. Personnel Qualifications

The well decommissioning procedures described below will be carefully adhered to and conducted under the supervision of an experienced geologist, engineer, or other qualified individual. If the overdrilling decommissioning method is utilized, drilling activities will be conducted by a registered well driller.

III. Equipment List

The following materials, as required, shall be available during pre-decommissioning and decommissioning activities:

- Site Health and Safety Plan (HASP);
- Health and safety equipment, as required in the HASP (e.g., air monitoring equipment, personal protective equipment);
- Information concerning the construction of the well to be decommissioned;
- Appropriate field forms or field notebook;
- Well keys;
- Water level probe;
- Cleaning materials;
- Drill rig with registered well driller and experienced personnel if the overdrilling method is utilized;
- Tremie pipe;
- Type I Portland cement;
- Uncoated bentonite pellets;
- Potable water;
- Containers for collecting spoils; and
- Any necessary specialized well drilling/decommissioning equipment.

IV. Cautions

Avoid using drilling fluids or materials that could impact groundwater or soil quality, or could be incompatible with the subsurface conditions.

Water used for over drilling or grouting boreholes upon completion will be of a quality acceptable for project objectives. If the water quality is unknown, testing of water supply should be considered.

Specifications of materials used for backfilling the bore hole will be obtained, reviewed and approved to meet project quality objectives.

No coated bentonite pellets will be used in monitoring well decommissioning, as the coating could be a source of contamination.

V. Health and Safety Considerations

Health and safety protocols should be described in the site-specific health and safety plan.

VI. Procedures

Plug-In Place Method

The plug-in-place method is applicable at locations where available information indicates that the annular space contains an adequate seal and vertical migration of constituents across a confining layer is not a concern in the well casing and screen interval, or if other considerations (e.g., double-cased well construction) preclude removal of the well casing. The well screen is left in place and may be additionally perforated, along with the base of the well, to allow the grout seal to penetrate the surrounding filter pack. The decommissioning process will consist of the following steps:

1. Perform a search of available records concerning the well to be decommissioned. The following activities should be performed to identify the location, construction, and condition of the well, and to determine the appropriate equipment to be utilized based on the depth, diameter, and access to the monitoring well:

    - Review the existing monitoring well log to identify construction characteristics (e.g., total depth, casing diameter, initial borehole diameter, type of casing, type of material(s) used);

    - Locate the monitoring well in the field;

    - Identify if the decommissioning equipment can access the monitoring well and/or if special considerations (e.g., construction of an access road) are necessary to gain access;

    - Conduct total depth measurements and water level measurements;

- Calculate the volume of the well that will need to be filled utilizing field measurements and formulas provided above; and

- Record all observations and measurements.

2. Remove the protective casing and well casing to a depth of approximately 3 to 4 feet below ground surface (bgs), if possible.

3. Perforate the base of the well screen utilizing a length of drilling rod or other equipment.

4. Prepare a neat cement grout. (Note: A neat cement grout is preferred for application through an in-place well; whereas, a bentonite grout or hydrated bentonite pellets may also be considered at locations where the well casing is removed or the well is overdrilled).

5. Place the neat cement grout in the perforated well casing via the tremie method (i.e., the grout will be pumped from the bottom of the well upward). The grout will be added until the well is filled to above the top of the well casing remaining in place (i.e., typically approximately 3 to 4 feet bgs). Verify that the amount of grout added equals or exceeds the calculated volume of the void to be filled.

6. The grout will be allowed to set for a minimum of 24 hours and the remainder of the borehole will be filled with concrete and/or other surface finish materials (see Step 7 below).

7. Where appropriate, a concrete surface finish will be installed by constructing an above-grade concrete slab a minimum of 6 inches thick, with a diameter at least 2 feet greater than the diameter of the borehole. If such a concrete surface finish is not compatible with the existing land use (e.g., roadway, parking lot, residential), the borehole shall be terminated with a minimum 1-foot-thick concrete plug above the grout and the remaining portion of the borehole shall be filled flush with grade with material(s) compatible with the surrounding land surface (e.g., asphalt, gravel, topsoil).

8. A Well Abandonment Log will be completed. A state specific Well Abandonment Log should be used and submitted to the appropriate state agency if required. .

Casing Removal Method

The casing removal method is applicable at shallow locations where vertical migration of constituents across a confining layer is not a concern and where the integrity of the

borehole is reasonably expected to be maintained following removal of the well materials. The decommissioning process will consist of the following steps:

1. Perform a search of available records concerning the well to be decommissioned. The following activities should be performed to identify the location, construction, and condition of the well, and determine the appropriate equipment to be utilized based on the depth, diameter, and access to the monitoring well:

    - Review the existing monitoring well log to identify construction characteristics (e.g., total depth, casing diameter, initial borehole diameter, type of casing, type of material(s) used);
    - Locate the monitoring well in the field;
    - Identify if the decommissioning equipment can access the monitoring well and/or if special considerations (e.g., construction of an access road) are necessary to gain access;
    - Conduct total depth measurements and water level measurements;
    - Calculate volume of well that will need to be filled utilizing field measurements and formulas provided above; and
    - Record all observations and measurements.

2. Remove the protective casing, if possible.

3. Remove the well materials (riser and screen).

4. Examine removed well materials to ensure that the entire section has been removed. Also ensure that the borehole has not collapsed and that the tremie pipe will be able to be inserted to the base of well depth. Well decommissioning should be completed by using the overdrilling method if the well casing is broken below grade and cannot be retrieved, or if the tremie pipe will not reach the base of the well.

5. Prepare a neat cement grout or a bentonite grout that is compatible with the soil and groundwater conditions present at the monitoring well. (Note: A neat cement grout or a bentonite grout is preferred for this application. Hydrated bentonite pellets may also be considered if the entire well boring is overdrilled, using procedures similar to those for abandoning boreholes).

6. Place the cement grout in the borehole via tremie method (i.e., the grout will be pumped from the bottom of the borehole upward). The grout will be added until the borehole is filled to approximately 3 to 4 feet bgs. Verify that amount of grout added equals or exceeds the calculated volume of the void to be filled.

7. The grout will be allowed to set for a minimum of 24 hours and the remainder of the borehole will be filled with concrete and/or other surface finish materials (see Step 8 below).

8. Where appropriate, a concrete surface finish will be installed by constructing an above-grade concrete slab a minimum of 6 inches thick, with a diameter at least 2 feet greater than the diameter of the borehole. If such a concrete surface finish is not compatible with the existing land use (e.g., roadway, parking lot, residential), the borehole shall be terminated with a minimum 1-foot-thick concrete plug above the grout and the remaining portion of the borehole shall be filled flush with grade with material(s) compatible with the surrounding land surface (e.g., asphalt, gravel, topsoil).

A Well Abandonment Log will be completed. A state specific Well Abandonment Log should be used and submitted to the appropriate state agency if required.

Overdrilling Method

The overdrilling method is the most conservative decommissioning procedure and should be utilized at locations where a well has penetrated a confining layer and there is no evidence that the annular space around the well casing was adequately sealed, or if attempts to remove the well casing are unsuccessful. The decommissioning process will consist of the following steps:

1. Perform a search of available records concerning the well to be decommissioned. The following activities should be performed to identify the location, construction, and condition of the well, and determine the appropriate equipment to be utilized based on the depth, diameter, and access to the monitoring well:

    - Review the existing monitoring well log to identify construction characteristics (e.g., total depth, casing diameter, initial borehole diameter, type of casing, type of material(s) used);

    - Locate the monitoring well in the field;

- Identify if a drill rig can access the monitoring well and/or if special considerations (e.g., construction of an access road) are necessary to gain access;
- Conduct total depth measurements and water level measurements;
- Calculate the volume of the well/borehole that will need to be filled utilizing field measurements and formulas provided above; and
- Record all observations and measurements.

2. Remove the protective casing, if possible.

3. If the protective casing has been removed, advance a hollow-stem auger or other drill casing (with an outside diameter larger than the well diameter) over the well casing to the bottom of the original borehole.

4. Prepare a neat cement grout or a bentonite grout that is compatible with the soil and groundwater conditions present at the monitoring well. Alternatively, hydrated bentonite pellets may be used to plug the borehole, using procedures similar to those for abandoning boreholes.

5. Place the cement grout in the borehole via tremie method (i.e., the grout will be pumped from the bottom of the borehole upward) at the same time the hollow-stem augers or drill casing are removed from the borehole. Grout will be added until the borehole is filled to approximately 3 to 4 feet bgs. Verify that the amount of grout added equals or exceeds the calculated volume of the void to be filled. If hydrated bentonite pellets are utilized, measure deposition depth with a weighted tape as the hollow-stem augers or drill casing are removed from the borehole to ensure that bridging does not occur. At certain shallow well locations installed in competent formations, it may be possible to remove the hollow-stem augers or drill casing prior to installing the sealant. If this is attempted, confirmatory measurements must be taken to verify that borehole integrity was maintained prior to plugging the hole.

6. The grout will be allowed to set for a minimum of 24 hours and the remainder of the borehole will be filled with concrete and/or other surface finish materials (see Step 7 below).

7. Where appropriate, a concrete surface seal will be installed by constructing an above-grade concrete slab a minimum of 6 inches thick, with a diameter at least 2 feet greater than the diameter of the borehole. If such a concrete surface seal is not compatible with the existing land use (e.g., roadway, parking lot,

residential), the borehole shall be terminated with a minimum 1-foot-thick concrete plug above the grout and the remaining portion of the borehole shall be filled flush with grade with material(s) compatible with the surrounding land surface (e.g., asphalt, gravel, topsoil).

8. A Well Abandonment Log will be completed. A state specific Well Abandonment Log should be used and submitted to the appropriate state agency if required.

Abandoning a Soil Boring

The following steps for abandoning a soil boring are summarized from ASTM D 5299-99:

1. Prepare a neat cement grout using Type I Portland cement and potable water mixed according to the following ratios:

   One (1) 94-pound bag of Type I Portland cement; and 5.5 gallons potable water.

2. As soon as the borehole is completed, place a grout pipe (tremie pipe) to the bottom of the boring and pump sealing grout slowly through the pipe to displace material in the borehole. Inject grout starting from the bottom of the hole. Grout slowly to prevent channeling of the grout. As the grouting progresses, slowly raise the pipe. Complete the grouting in one continuous operation, continuing to pump grout until overflowing grout is seen at the surface. The overflowing grout should be similar in appearance and characteristics to the grout being pumped down the hole.

3. Grout may settle over a 24-hour period. After 24 hours, check the grout in the borehole for settlement. If settling has occurred, place additional grout to the surface. When grouting is complete, finish the surface in a manner appropriate for final use (e.g., concrete).

VII. Waste Management

Waste management protocols should be described in the site-specific work plan.

VIII. Data Recording and Management

To assure that a well is properly plugged and there has been no bridging of the plugging materials, verification calculations and measurements are required to determine whether the volume of material placed in the well/borehole equals or

exceeds the volume of the void being filled. Some useful formulas for calculating well and material volumes are provided below.

- 7.481 gallons = 1 cubic foot
- 202.0 gallons = 1 cubic yard
- Volume of well/borehole (in gallons) = π TIMES well/borehole radius (in feet) squared TIMES length of well/borehole (in feet) TIMES 7.481 (gallons per cubic foot)

IX. Quality Assurance

Quality assurance protocols should be described in the site-specific work plan.

X. References

ASTM. D5299-99. Standard Guide for Decommissioning of Ground Water Wells, Vadose Zone Monitoring Devices, Boreholes, and Other Devices for Environmental Activities.

F-14

Injection Well Design and Installation

ARCADIS
Infrastructure, environment, facilities

Imagine the result

Injection Well Design and Installation

Rev. #: 1

Rev Date: 7/20/10

I. Scope and Application

The following procedures have been formulated for the design, installation and development of groundwater injection wells. These detailed steps should be followed to ensure appropriate and consistent protocol in the installation and development of injection wells. Injection wells will generally be completed in unconsolidated sand and gravel.

A figure of a typical injection well is attached that contains notes on the major design features which are detailed in this SOP.

II. Personnel Qualifications

Injection well design and installation will be performed by persons who have been trained in proper well design under the guidance of an experienced geologist or engineer. Where field sampling is performed for soil or bedrock characterization, field personnel will have undergone in-field training in soil or bedrock description methods, as described in the appropriate SOP(s) for those activities.

III. Equipment List

The following materials will be available during soil boring and injection well installation activities, as required:

- Site Plan with proposed soil boring/well locations;
- Work Plan or Field Sampling Plan (FSP);
- Health and Safety Plan (HASP)
- Personal protective equipment (PPE), as required by the HASP;
- Traffic cones, delineators, caution tape, and/or fencing as appropriate for securing work area, if such are not provided by the drillers;
- Appropriate sampling equipment;
- Soil and/or bedrock logging equipment;
- Appropriate sampling containers and labels;
- Drum and/or rolloff labels as required for investigation derived waste ;

- Chain of custody forms;
- Insulated coolers with ice;
- Photoionizing detector (PID) or flame ionizing detector (FID);
- Resealable plastic bags;
- Water level or oil/water interface meter;
- Decontamination equipment;
- Field notebook.

Prior to mobilizing to the site, ARCADIS personnel will contact the drilling subcontractor to confirm that appropriate sampling and well installation equipment will be provided. Specifications of the sampling and well installation equipment are expected to vary by project, and so communication with the driller will be necessary to ensure that the materials provided will meet the project objectives. Equipment typically provided by the drillers could include:

- Drilling and sampling equipment;
- Drums or rolloffs for investigation derived waste;
- Decontamination equipment
- Decontamination pad materials; and
- Well construction materials including riser, screen, filter packs, and well seal materials.

IV. Cautions

Prior to beginning field work, underground utilities in the vicinity of the drilling areas will be delineated by the drilling contractor or an independent underground utility locator service. See separate SOP for utility clearance.

V. Health and Safety Considerations

Field activities associated with injection well installation will be performed in accordance with a site-specific HASP, a copy of which will be present on site during such activities.

VI. Procedure

Drilling Methods

The following sections provide typical drilling methods that can be used to install injection wells; however, the project team should select a drilling method that is best suited to the site conditions and not rely exclusively on those provided.

Shallow Wells

Shallow injection wells (generally 50 feet or less in depth) can be drilled and installed using a hollow stem auger drill rig unless field conditions indicate this method is not feasible (i.e. heaving sands due to shallow water table). A rotosonic drill rig, which is described below, may then be used for shallow injection well installation. Hollow stem auger drilling is accomplished by rotating a hollow auger into the subsurface. The inside diameter of the auger stem should be at least 2 inches greater than the diameter of the well to be set. Soil sampling is typically performed by using a split-spoon device attached to a length of drill rod advanced inside of the hollow augers. The 2-inch diameter by 2-foot long stainless steel split-spoon device is driven into the substrate ahead of the auger for collection of soil samples using a drive hammer attached to the drill rod. The auger is advanced to ensure that the borehole remains open.

Deep Wells

Deep injection wells (generally greater than 50 feet) are typically drilled and installed using either mud rotary or rotosonic drill rigs. Direct mud-rotary drilling uses a rotating drill pipe with a hard-tooled drill bit attached at the bottom. The bit size determines the size of the borehole and the borehole size should be a minimum of 4 inches greater than the size of the well materials. Fluid or mud (generally a mixture of bentonite powder and water) is forced down through the drill pipe and then back up the borehole outside of the drill pipe, carrying soil cuttings from the drill bit with it. The fluid is discharged at the surface through a pipe into a settling tank, pond, or pit. As soil cuttings settle out in the pit, the fluid overflows into a suction pit, so a pump can recirculate the fluid back through the drill rods to the bit. The drilling fluid serves to: (1) cool and lubricate the bit, (2) stabilize the borehole wall, and (3) prevent the inflow of formation fluids. Casing is not required during mud rotary drilling, unless borehole

caving or lost circulation zones are encountered. In-situ soil samples can be obtained with a split-spoon device described above by either inserting the sampling device inside the drilling rod and collecting the soil sample taken ahead of the drill bit or by removing the drill rod and bit from the borehole and inserting the sampling device.

Rotosonic drilling combines high frequency vibrations, downward pressure, and relatively slow rotations to advance a dual string of drill pipe. This combination of forces advances the drill pipe through unconsolidated and consolidated materials. The dual string consists of an inner core barrel sampler and drill pipe and an outer pipe casing, used to both sample and advance the borehole. Generally, the core barrel is 4-inch inner diameter by 10-foot long, used with 6-inch diameter outer pipe casing. However, larger diameter casings (up to 12-inch diameter) can be used for larger diameter well materials. The outer casing selected should be a minimum of 4-inches greater than the size of the well materials.

The core barrel is driven ahead of the outer casing and is used to collect a representative continuous soil sample. After the core barrel is driven to the required depth, the drill head (attached to the drill rig) is disconnected from the core barrel and reconnected to the outer casing. The outer casing is then driven down over the core barrel. The casing prevents the hole from collapsing when the core barrel is extracted for soil sample retrieval. The soil sample is retrieved from the borehole and extruded from the core barrel into plastic. Drilling can be completed without the use of drill fluids, but water is commonly used during driving of the outer casing to flush material from the annular space between the core barrel and pipe casing.

Well Design

Interpretation of the subsurface geology, well screen placement, and filter pack and well screen design are important factors in the creation of an efficient groundwater injection well. The following sections discuss the methods and considerations used to determine proper well screen placement and sizing.

Geology and Well Screen Placement

The first step to positioning an injection well should be to understand the geology at the injection well location, including formation types and properties, the depth to the saturated zone, depth to bedrock, and general target zone for the injection well completion. This can be determined by installing an exploratory boring located within 10 to 15 feet from the proposed location of the injection well. A maximum of 15 feet will help assure minimal variation in geology. However, the soil boring should not be located closer than 10 feet from the proposed injection well location to reduce the potential of grout contamination from the abandoned soil boring into the injection well.

The exploratory soil boring can be completed as an observation well for hydraulic testing of the injection well, if needed. If an observation well is installed in the exploratory borehole, the screened interval for the observation well should be in the same permeable zone as that selected for the injection well.

Regardless of drilling method, if there are no other borings or wells in the vicinity, continuous formation sampling should begin at the ground surface and continue to the base of the soil boring. If ample geologic control is available from nearby soil borings then continuous formation sampling may be started at approximately 20 feet above the top of the proposed elevation of the injection well screen to at least five feet below the base of the anticipated screened interval. Soil samples shall be classified in the field using the ARCADIS Soil Description SOP unless a client specific method is required. Within the anticipated well screen interval, formation samples representing each strata should be collected at 5-foot intervals and submitted to a geotechnical laboratory for grain-size analysis using ASTM Method D422-63.

For the grain-size analysis, enough sieves should be used to provide a good particle distribution curve. The following U. S. mesh (in inches) sieve sizes are recommended to provide an accurate particle distribution curve: 6, 8, 12, 16, 20, 30, 40, 50, 70, 100, and 200. The laboratory should be requested to report D_{30} (the diameter of the material that retains 70% of the material and passes 30%), D_{60} (the diameter of the material that retains 40% of the material and passes 60%), and C_u (Uniformity coefficient which is defined as D_{60}/D_{10}) for each sample.

The final well screen interval, slot size, and gravel pack for the injection well will be determined based on the results of field classification and the grain-size analyses. If any portion of the desired well screen interval has a silt/clay layer, the position of the well screen interval should be reevaluated to try to avoid or exclude the silt/clay.

Filter Pack and Well Screen Design

The following steps should be completed after the initial exploratory boring and geotechnical sampling is completed, but prior to mobilization for the injection well installation. Before beginning the well screen filter pack design, a grain-size analysis should be requested for the various commercially available filter sands from a preferred filter sand pack manufacturer, and a sample of the proposed sand obtained.

A spreadsheet based filter pack and well screen design tool is available on the TKI Well Design website that performs the tasks listed below.

1. Choose the formation material to be screened and send it to a soils (geotechnical) laboratory. Have them conduct a sieve analysis of the material

and construct a grain-size-analysis curve for this material. The graphs should have cumulative percent finer on the x-axis and the grain size (in thousandths of an inch) on the y-axis. Select the finest-grain material within the selected screen interval for this analysis.

2. Find D_{30}, $D_{60,}$ and C_u from the grain-size analysis report.

3. Multiply the D_{30} size of the material by a factor of between 4 and 10 based on the following information:

   a) Use a multiplier of 4 to 6 if the material is uniform (well sorted or poorly graded) and D_{60} is 0.010 inch or less. The material is uniform if C_u <4 for gravel or <6 for sand; and

   b) Use a multiplier of 6 to 10 if the material is non-uniform (poorly sorted or well graded, C_u >4 for gravels or >6 for sand) and the formation includes silt or thin clay stringers. Place the result of this multiplication on the graph of the grain-size distribution curve as the 30% size of the filter material. This is the first point on a curve that represents the grading for the filter material.

4. Through the initial point on the filter pack curve, draw a smooth curve representing material with a uniformity coefficient of approximately 2.5 or less.

5. Choose the filter pack sand that approximates the filter pack curve constructed above. The C_u for the filter pack sand should be less than 2.5 and the filter pack sand should be clean, well-rounded grains and contain at least 90 percent quartz grains.

   a) Select the well screen slot size. Screen slot size must retain 90% or more of the filter pack sand (D_{10} of the filter pack sand); and

   b) Determine filter pack sand thickness. Filter pack sand thickness should be >3 inches and <6 inches.

6. Calculate Entrance Velocity (V = Q/A) where:

   V = Entrance Velocity (in feet per second [ft/sec])
   Q = Anticipated Well Yield (in ft^3/sec)
   A = Screen Open Area (in ft^2)

1) Entrance velocity should be less than 0.05 ft/sec to minimize head losses of water entering the well screen, and to minimize chemical incrustation and corrosion on the well screen.

2) A = Open area of screen (ft^2) = Surface area of solid pipe * Percent open area of the screen. To calculate A:

   a) Surface area of solid pipe (in^2) = pi * D (inches) * 12 (inches/foot) * screen length (ft). (D = Screen diameter in inches). Note: Divide surface area of solid pipe (in^2) by 144 for ft^2.

   b) Percent open area of the screen (Area/ft of screen) = slot size / (slot size + wire width). This information can also be obtained from the screen manufacturer.

3) V (ft/sec) = Q (ft^3/sec)/A (ft^2).

Determine Minimum Screen Length (for partially penetrating wells) where:

1) Minimum screen length = Q (ft^3/sec)/[V (ft/sec) * (Area/ft of screen)].

Well Installation

Injection well screens should be installed within the high permeability sections of the aquifer to maximize the connection with the aquifer and minimize well material costs. However, heterogeneities within the high permeability zones can generate unintended concentrations of flow. Shorter screen intervals between 5 and 10 feet reduce the risk of flow allocation problems and screens longer than 15 feet are strongly discouraged.

Additionally, the top of the screen should be installed below the water table to ensure that the screen is fully submerged during injections. This configuration helps to prevent reagent injection into the vadose zone and minimizes well fouling by limiting the amount of oxygen.

Well Casing and Screen Material

Materials used for injection well casings and screens are typically PVC and/or Stainless Steel. It is recommended to use 316 Stainless Steel, as opposed to 304 Stainless Steel, due to the much higher corrosion resistance of the former. Both materials are available in a variety of thicknesses depending on the strength requirements of the well. Flush joints are typically used for both PVC and Stainless Steel casings and screens. These joints are the weak points in the well string. As

such, ensure that the joints meet the requirements of ASTM F480-88A. Selection of well casing and screen materials should be made based on the following;

- Material compatibility with groundwater and reagent geochemistry, Changes in geochemistry due to the reaction of reagent with site groundwater, such as a reduction in pH, must be factored into material selection. PVC and stainless steel are compatible with a wide variety of chemicals, however each material has limitations. For example, PVC should not be used with many DNAPL chemicals. Stainless steel can leach metals in some groundwater settings.

- Required strength of well materials based on the depth of well installation and expected internal and external pressures generated during well installation, and injection well operation.

Well screens are available in either as slotted screen or wire wrapped (WW) screen in both PVC and Stainless Steel. WW screens are preferred over slotted screens due to the much larger open are of the WW screens. The larger open area allows for better well development, less required injection pressures and easier cleaning. Stainless Steel WW screens have a larger open area than PVC WW screens and are much stronger.

The combined total connected length of the casing sections and well screen may differ from the additive length of each individual section depending on the type of well material used, due to variations in section threading and connections. Therefore, prior to installation of the casing and screen, the ARCADIS field geologist should “tally” the length of the materials to be installed. Verify the slot size of the well screen, which should be labeled by the manufacturer. After placement of the sump, well screen, and well riser into the borehole, but prior to installation of filter pack material, the ARCADIS field geologist should confirm the total depth of the well from the ground surface to the base of the well, to ensure that the screen interval is located at the required depth.

Well Installation Utilizing Hollow Stem Auger Drilling

After drilling has reached the top of the screen interval, the remaining portion of the borehole shall be augered using backpressure if heaving sands are encountered. Back pressure is usually accomplished with the addition of water to the borehole during drilling, which exerts a pressure within the augers that prevents heaving sand or other formation material from coming into the borehole during borehole advancement and well installation. The well screen, and riser pipe will then be gently lowered inside the augers until the well is at the desired depth as determined by the field geologist.

After placement of the filter pack, which is described below, the augers should be pulled back, not reverse spun, to the top of the filter pack. The augers should be withdrawn slowly with a dead pull to eliminate heaving caused by suction.

Well Installation Utilizing Rotosonic Drilling

Water is generally used during well installation with a rotosonic rig to flush out formation material that can accumulate between the outer casing and the inner sampling barrel. The well screen and riser pipe then will be gently lowered inside the outer casing until the well is at the desired depth as determined by the field geologist. After placement of the filter pack sand as described below, the outer casing should be withdrawn slowly from the borehole to eliminate any heaving that may be caused by suction.

Well Installation Utilizing Mud Rotary Drilling

After drilling has reached the bottom of the screen interval, the driller should circulate and condition the drill fluid to assure the mud is not too thick or thin. Periodically, the driller and geologist should check the soil cuttings in the return mud to assure most medium to coarse-grain sand is no longer in the drill fluid. After a satisfactory mud mixture is present, the driller should remove the drill rod and bit from the borehole. The driller then should gently lower the well screen, and riser pipe inside the borehole until the well is at the desired depth as determined by the field geologist.

Filter Pack Installation and Grouting

Based on the formation material and well screen size, the selected filter pack sand should be introduced into the borehole, inside of the augers or outer casing, dependent on which drilling method is used. The filter pack material should extend from below the base of the well screen to above the top of the well screen, to a height of 25 percent of the screen length or 5 feet, whichever is greater.

If auger drilling was used to install the well, the filter pack sand can be installed around the well screen by either pouring the sand from the top of the augers, or pumping through a tremie pipe placed into the screen interval. If the filter pack sand is introduced from the top of the augers, a liberal amount of water should be introduced with the filter pack to help prevent bridging of the material in the augers. A typical ratio of water to filter pack material is 5 to 10 gallons of water for each 1 cubic foot of filter pack material.

If mud rotary drilling was used to install the well, the filter pack sand should be installed around the well screen by pumping a sand/water mixture through a tremie pipe placed into the screen interval.

If rotosonic drilling was used to install the well, the filter pack sand can be installed around the well screen by either pouring the sand from the top of the outer casing, or pumping through a tremie pipe placed into the screen interval. If the filter pack sand is introduced from the top of the outer casing, a liberal amount of water should be introduced with the filter pack to help prevent bridging of the material in the casing.

After the filter pack sand has had sufficient time to settle, the elevation to the top of the filter pack should be measured to ensure ample (at least 1-foot) filter pack is in place above the top of the well screen to prevent any intrusion of the filter pack seal into the well screen.

A two to three foot thick secondary filter pack, comprised of fine sand, should then be installed on top of the filter pack to retain the annular seal and prevent fouling of the primary filter pack. In some cases a 3 to 5 foot bentonite seal may be required by local regulations. If this is the case the primary filter pack should be extended to at least 2 feet above the top of the screen before placing the bentonite seal and a secondary filter pack is unnecessary.

Neat cement (Portland cement and water) grout should be placed into the borehole from bottom to top through a tremie pipe placed to a depth just above the secondary filter pack or bentonite seal. The tremie pipe shall have a 90° elbow on the bottom to prevent the introduction of grout into the filter pack. The grout should be mixed at a rate of 5 to 6 gallons of water per 100 pounds of Portland cement and used before stiffening occurs. The neat cement grout should extend as long as possible while leaving space at the top of the annulus for access to the well casing for the addition of subgrade transfer piping.

Well Development

Proper development is a very important factor in achieving the necessary communication between the injection well and the surrounding formation. The following sections include a description of development methods typically used, a list of development equipment, development set-up, and the development procedures to follow to properly develop the injection well. Development should not proceed until at least 24 hours after placement of the cement grout to allow it to set.

Well Development Methods

There are three general methods used singularly or in combination for development of injection wells. These methods are air development, water jetting, and mechanical surging. Air development can either be performed to “pump” the well or for surging. In both cases compressed air is injected through a line placed into the well to lift water and sediment from the well. For pumping air is introduced into the well on a continuous basis. For surging, air is injected into the well to lift the water to the surface and when it reaches the surface the air supply is shut off, allowing the aerated water column to fall. Water jetting involves pumping water through a pipe and out a jetting tool at high velocities with nozzles positioned within the well screen. The high velocity jets force the water outward through the well screen openings and agitate the formation particles surrounding the well screen. A jetting SOP is available that details the procedures. Mechanical surging involves inserting a tight fitting block of material in the well and forcing water into and out of the well screen/formation by moving the block upwards and downwards inside of the well casing.

A combination of methods generally should be used during well development. The initial well development process should begin with airlifting to determine that groundwater can flow freely into the well screen and remove any residual sediment from the well installation. When initially injecting air into the well, caution is required as application of too much air volume when the formation is clogged could result in a collapse of the well screen. This can be avoided by only submerging the air line into the upper portion of the water column until flow from the well screen is established. The air line can then be lowered gradually into the well to increase the groundwater flow into the well screen.

Once the well is initially cleaned, water jetting should be added to the airlifting development procedure. Thereafter, surging using the airlift or surge block method can be phased in and alternated with water jetting and airlifting. In addition, the use of Bentonite Mud Removal (BMR) chemical can be used during development to address problems such as smearing of the borehole wall during well installation, or to remove materials used during mud rotary drilling.

Development Using Mechanical Surging Techniques

This section summarizes the development protocol and procedures to follow for development using mechanical surging techniques for injection wells. Surging should only be used for well development after most of the fines have been removed from the well. An exception is if BMR is going to be added to the injection well. Mechanical (or airlift) surging of the chemical into the screened interval is appropriate to push the BMR into the formation. Refer to the BMR Application Protocol section for details on

the use and application of BMR. Surging of the injection well may be alternated with jetting and airlifting.

The following procedures should be followed when surging injection wells. Jetting and airlifting will be conducted on all new injection wells for the first portion of the development period before any surging is conducted (unless BMR is added). This is required so that the majority of sediment, drilling debris, and/or drilling fluids are removed from the well initially and do not get forced into the surrounding formation during surging.

- For mechanical surging, lower the hollow surge block into the well until it sits approximately 10 to 15 feet above the well screen. Surge the well gently at first to allow any material blocking the screen to break up and move into the well.

- Extra care should be used during surging if the formation above the screen consists mainly of fine sand, silt, or soft clay that may slump into the screen.

- In wells screened in multiple zones, development should begin above the top screen and move progressively downward between screen intervals to prevent the surge tool from becoming sand locked. This procedure is only good for wells with at least 5 feet of blank well casing between well screens.

- Continue surging for several minutes, and then slowly pull the block from the well. Prior to removing the surge block from the well, take care to break the surge block seal within the well casing to allow any water that accumulated above the block to drain back into the well rather than coming out as the surge block is removed.

- Measure the total depth of well to determine sediment build-up.

- Airlift the sediment-laden water from the well until the water column clears up. Use an eductor pipe with the air line to prevent air from moving out into the formation. Re-measure total well depth to determine sediment removal.

- To prevent fine material from being forced back into the formation during mechanical surging, airlifting should be performed between surging cycles to remove sediment from the well as often as possible.

- Continue alternate cycles of surging and airlifting until surging fails to produce substantial quantities of sediment.

Bentonite Mud Remover Application Protocol

The following section describes the procedures to be followed for BMR application to any injection or monitoring well. BMR is a surfactant chemical primarily composed of organic acids used in the breakdown and dissolution of clay or clay-sized particles smeared on the outer wall of the borehole. BMR is generally used if injection wells were installed with rotosonic or mud rotary drilling. Rotosonic drilling may cause greater smearing of the borehole wall, and mud rotary drilling can result in excessive mud on the borehole wall or caked within the filter pack. BMR is generally not needed if the screened formation consists of clean sand without fine-grain particles, and hollow-stem auger or rotosonic drilling was used for well installation. In addition, if jetting and airlifting development procedures appear to adequately clean out the well and surrounding formation, the application of BMR may not be needed. A general guide to the amount of BMR needed for one application for a 6-inch diameter injection well is:

- 4 lbs for 10 feet of water column in the well casing.

For all other well radii, consult the table on the 5-gallon bucket of BMR. For best results, the BMR should be allowed to sit in the well for at least twelve hours after being placed.

The following is a general guide for the application of the BMR:

1. The depth to water should be measured using a Solinst water level meter. Total well depth may be measured with heavily weighted Solinst water level meter or heavily weighted tape.

2. The appropriate amount of BMR should be calculated (using the above mentioned amount) and weighed out into clean, empty 5-gallon buckets.

3. Add water to the white, crystalline BMR mixing in a ratio of approximately 2 to 3 gallons of water for every 10 pounds of BMR until the amount of solution required for the application is mixed. The amount of water added doesn't need to be exact as long as enough water is added to sufficiently dissolve the white solid. As you add water, make sure to stir the solution until the solid is dissolved.

4. Pour the BMR solution down the well. After the entire solution has been poured into the well, add 15-20 gallons of water to push the solution down the well and out the screened interval.

5. Allow the BMR solution to sit approximately 20 minutes in the well

6. After the BMR has been allowed to sink to the screened interval for 20 minutes, the next step is to mechanically force the chemical into the filter pack and out into the formation. Surging the screened interval using mechanical or air surging methods can do this. These methods should only be used after the initial stage of development when the formation has been cleaned out using the air pumping procedures discussed above.

   - Mechanical Surge Method: Lower a hollow surge block to the 10 to 15 feet below the water level in the well and surge up and down repeatedly for about 20 to 30 minutes. After this time, the surge block should be slowly raised out of the well. Prior to removing the surge block from the well, take care to break the surge block seal within the well casing to allow any fluids or BMR solution that accumulated above the block to remain within the well rather than coming out as the surge block is raised out of the well.

   - Air Surge Method: Lower the air line 10 to 25 feet below the water level in the well and alternate turning on and off the air supply for a period of 20 to 30 minutes. Be careful to make sure that the air supply is cut off prior to the water reaching the top of the casing.

7. The BMR should then be allowed to sit in the well for a minimum of 12 hours. After this time, the BMR should be airlifted out of the well. This airlifting period should last at least one hour, but additional airlifting should be performed if significant amounts suspended clays and silts are present in the groundwater coming out of the well. The time spent airlifting the well should be made based on the conditions present at each well. After the airlifting is finished, development of the well should continue using appropriate methods. If abundant suspended sediment is present after the first BMR injection, additional BMR treatments may be needed.

Well Completion

The injection well casing should be fitted with a pressure relief valve to prevent buildup of pressures during reagent injections. The pressure relief valve should be designed in such a manner that prevents pressure relief towards any site worker. A well cap safety tether should also be installed on the well cap to prevent energized ejection of the cap in the event of the pressure relief valve failure. Additionally the well cap should be labeled to alert site workers as to the possible pressure build up.

Injection wells should be completed in a manner that protects the well from damage either using a flush mounted or above grade protective casing.

VII. Waste Management

Investigation-derived wastes (IDW), including soil cuttings and excess drilling fluids (if used), decontamination liquids, and disposable materials (well material packages, PPE, etc.), will be placed in clearly labeled, appropriate containers, or managed as otherwise specified in the Work Plan, FSP, and/or IDW management SOP.

VIII. Data Recording and Management

Drilling activities will be documented in a field notebook and later transferred to a well construction form which is attached. Pertinent information will include personnel present on site, times of arrival and departure, significant weather conditions, timing of well installation activities, soil descriptions, well construction specifications (screen and riser material and diameter, sump length, screen length and slot size, riser length, sand pack type), and quantities of materials used.

In addition, the locations of newly-installed wells will be documented photographically or in a site sketch. If appropriate, a measuring wheel or engineer's tape will be used to determine approximate distances between important site features.

The well or piezometer location, ground surface elevation, and inner and outer casing elevations will be surveyed using the method specified in the site Work Plan. Generally, a local baseline control will be set up. This local baseline control can then be tied into the appropriate vertical and horizontal datum, such as the National Geodetic Vertical Datum of 1929 or 1988 and the State Plane Coordinate System. At a minimum, the elevation of the top of the inner casing used for water-level measurements should be measured to the nearest 0.01 foot. Elevations will be established in relation to the National Geodetic Vertical Datum of 1929. A permanent mark will be placed on top of the inner casing to mark the point for water-level measurements.

IX. Quality Assurance

All drilling equipment and associated tools (including augers, drill rods, sampling equipment, wrenches, and any other equipment or tools) that may have come in contact with soil will be cleaned in accordance with the procedures outlined in the appropriate SOP. Well materials will also be cleaned prior to well installation.

X. References

American Society for Testing and Materials, 2003. C150-02ae1, “Standard Specification for Portland Cement”.

American Society for Testing and Materials, 2003. D2488-00, “Standard Practice for Description and Identification of Soils (Visual Manual Procedure)”.

American Society for Testing and Materials, 2003. D422-63, “Standard Test Method for Particle Size Analysis of Soils”.

Das, Braja, M., 1998. Principles of Geotechnical Engineering, Fourth Edition. PWS Publishing Company. Boston, Massachusetts.

Driscoll, Fletcher G., 1986. Groundwater and Wells, Second Edition. Johnson Filtration Systems Inc. St. Paul, Minnesota.

NOTES

1. Well should be designed such that the well screen is fully submerged at the time of injection.

2. Well seal consists of neat cement grout with no bentonite seal. Cement must be allowed to set up for a minimum of 72-hours prior to development (and injection). For well seals greater than 50 feet in length (or with large > 4 inch annulus) consideration for heat generation must be taken into account with well materials. Also for exceptionally deep wells (>100 feet) long grout columns may result in pressures that exceed the overburden strength and lead to formation failure.

3. Fine sand placed above well sand pack to prevent migration of neat cement to well screen.

4. Sand pack size selected based on specific aquifer formation grainsize analysis. Refer to (http://team/sites/insitu/Topics/RemHydr/Optimizing.aspx) for guidance regarding sandpack and well screen design. General rule of thumb: Sandpack should retain 90% of the aquifer formation.

5. Well screen slot size should be selected based on sand pack . Refer to (http://team/sites/insitu/Topics/RemHydr/Optimizing.aspx) for guidance regarding sand pack and well screen design. General rule of thumb: Well screen should retain 90 % of the selected sand pack.

6. Well diameter to be sized to achieve a design flow velocity of less than or equal to 0.05 feet per second through screen.

7. Well materials must be selected to be compatible with injection fluids and selected to withstand depth and injection pressures.

8. Protective cover to be designed to meet project specifications. Traffic rated covers to be used in high traffic areas. Traffic rated covers require reinforced concrete pads.

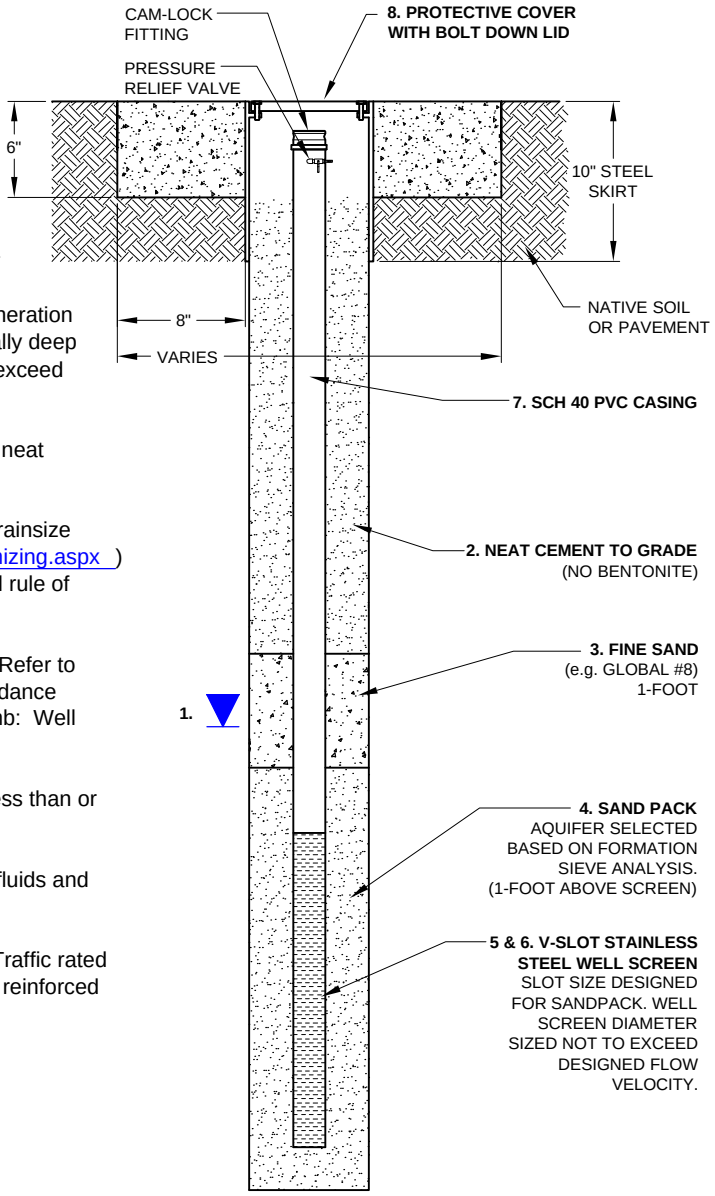

ARCADIS

TYPICAL ISCO WELL CONSTRUCTION

UNCONFINED AQUIFER, SHALLOW IMPACTS

ARCADIS Project No.
12345678.0000.12345

Date
(DATE)

ARCADIS
28550 CABOT DRIVE
SUITE 500
NOVI, MICHIGAN
TEL. 248.994.2240

CITY:NOVI DIV/GROUP:ENV DB: PIC: PM: TM: TR
S:\CAD\typical isco well.dwg LAYOUT: MODEL SAVED: 8/12/2008 10:36 AM ACADVER: 17.0S (LMS TECH) PAGESETUP: ----PLOTSTYLETABLE: ARCADIS NOVI.CTB PLOTTED: 8/12/2008 10:37 AM BY: SMITH, ANTONIO

ARCADIS

Well Construction Log

(Unconsolidated)

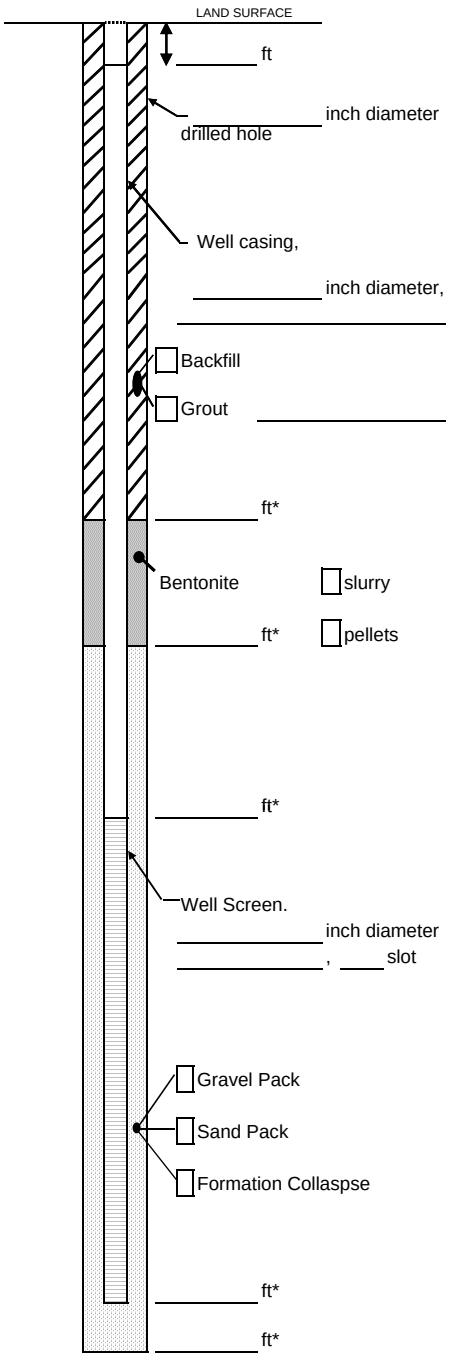

Measuring Point is
Top of Well Casing
Unless Otherwise Noted.

* Depth Below Land Surface

Project _____ Well _____

Town/City _____

County _____ State _____

Permit No. _____

Land-Surface Elevation and Datum:

_____ feet ☐ Surveyed

☐ Estimated

Installation Date(s) _____

Drilling Method _____

Drilling Contractor _____

Drilling Fluid _____

_____

Development Technique(s) and Date(s)

_____

_____

_____

Fluid Loss During Drilling _____ gallons

Water Removed During Development _____ gallons

Static Depth to Water _____ feet below M.P.

Pumping Depth to Water _____ feet below M.P.

Pumping Duration _____ hours

Yield _____ gpm Date _____

Specific Capacity _____ gpm/ft

Well Purpose _____

_____

_____

Remarks _____

_____

_____

_____

_____

Prepared by _____

F-15

Water-Level and NAPL Thickness Measurement

ARCADIS
Infrastructure, environment, facilities

Imagine the result

Water-Level and NAPL Thickness Measurement Procedures

Rev. #: 0

Rev Date: February 27, 2009

I. Scope and Application

Monitoring well water levels and thickness of non-aqueous phase liquids (NAPLs) will be determined, as appropriate, to develop groundwater elevation contour maps and to assess the presence or absence of NAPL in wells. This SOP applies to light and/or dense NAPLs (LNAPLs and DNAPLs, respectively). In addition, because this SOP describes water-level measurement from surveyed measurement points, this SOP can be followed, to obtain surface water level measurements from surveyed measurement points.

Fluid levels will be measured using an electric water-level probe and/or NAPL-water interface probe from established reference points. Reference points are surveyed, and are established at the highest point at the top of well riser, and will be based on mean sea level, or local/onsite datum. The Operating and Maintenance (O&M) Instruction Manual for the electric water level probe and/or and interface probe should be reviewed prior to commencing work for safe and accurate operation.

II. Personnel Qualifications

Individuals conducting fluid level measurements will have been trained in the proper use of the instruments, including their use for measuring fluid levels and the bottom depth of wells. In addition, ARCADIS field sampling personnel will have current health and safety training including 40-hour HAZWOPER training, site supervisor training, site-specific training, first aid, and CPR, as needed. In addition, ARCADIS field sampling personnel will be versed in the relevant SOPs and posses the required skills and experience necessary to successfully complete the desired field work. ARCADIS field personnel will also be compliant with client-specific training requirements, such as (but not limited to) LPS or other behavior-based training, and short-service employee restrictions.

III. Equipment List

The following materials, as required, shall be available during fluid level measurements.

- photoionization detector (PID)
- appropriate health and safety equipment, as specified in the site Health and Safety Plan (HASP)

- laboratory-type soap (Alconox or equivalent), methanol/hexane rinse, potable water, distilled water, and/or other equipment that may be needed for decontamination purposes
- electronic NAPL-water interface probe
- electronic water-level meter
- 6-foot engineer's rule
- portable containers
- plastic sheeting
- field logbook and/or personal digital assistant (PDA)
- indelible ink pen
- digital camera (optional, if allowed by site policy)

IV. Cautions

Electronic water-level probes and NAPL-water interface probes can sometimes produce false-positive readings. For example, if the inside surface of the well has condensation above the water level, then an electronic water-level probe may produce a signal by contacting the side of the well rather than the true water level in the well. In addition, NAPL-water interface probes can sometimes indicate false positive signals when contacting a sediment layer on the bottom of a well. In contrast, a NAPL-water interface probe may produce a false-negative (no signal) if a floating layer of non-aqueous phase liquid (NAPL) is too thin, such as a film or sheen. To produce reliable data, the electronic water level probe and/or interface probe should be raised and lowered several times at the approximate depth where the instrument produces a tone indicating a fluid interface to verify consistent, repeatable results. In addition, a bottom-loading bailer should periodically be used to check for the presence of NAPLs rather than relying solely on the NAPL-water interface probe.

The graduated tape or cable with depth markings is designed to indicate the depth of the electronic sensor that detects the fluid interface, but not the depth of the bottom of the instrument. When using these devices to measure the total well depth, the additional length of the instrument below the electronic sensor must be added to the apparent well depth reading, as observed on the tape or cable of the instrument, to obtain the true total depth of the well. If the depth markings on the tape or cable are

worn or otherwise difficult to read, extra care must be taken in obtaining the depth readings.

V. Health and Safety Considerations

The HASP will be followed, as appropriate, to ensure the safety of field personnel. Access to wells may expose field personnel to hazardous materials such as contaminated groundwater or NAPL. Other potential hazards include stinging insects that may inhabit well heads, other biologic hazards, and potentially the use of sharp cutting tools (scissors, knife). Appropriate personal protective equipment (PPE) will be worn during these activities. Field personnel will thoroughly review client-specific health and safety requirements, which may preclude the use of fixed/folding-blade knives.

VI. Procedure

Calibration Procedures

If there is any uncertainty regarding the accuracy of the tape or cable associated with the electronic water-level probe or NAPL-water interface probe, it should be checked versus a standard length prior to use to assess if the tape or cable above the meter has been correctly calibrated by the manufacturer, and to identify evidence of tape or cable stretching, etc.

1. Measure the lengths between markers on the cable with a 6-foot engineer's rule or a fiberglass engineer's tape. The tape or cable associated with the electronic water-level probe or NAPL-water interface probe should be checked for the length corresponding to the deepest total well depth to be monitored during the data collection event.

2. If the length designations on the tape or cable associated with the electronic water-level probe or NAPL-water interface probe are found to be incorrect, the probe will not be used until it is repaired by the manufacturer.

3. Record verification of this calibration process in field logbook or PDA.

Measurement Procedures

The detailed procedure for obtaining fluid level depth measurements is as follows. Field notes on logs will be treated as secured documentation and indelible ink will be used. As a general rule, the order of measuring should proceed from the least to most contaminated monitoring wells, based on available data.

1. Identify site and well number in field logbook using indelible ink, along with date, time, personnel, and weather conditions.

2. Field personnel will avoid activities that may introduce contamination into monitoring wells. Activities such as dispensing gasoline into vehicles or generators should be accomplished well in advance of obtaining field measurements.

3. Don PPE as required by the HASP..

4. Clean the NAPL/water interface probe and cable in accordance with the appropriate cleaning procedures. Down-hole instrumentation should be cleaned prior to obtaining readings at the first monitoring well and upon completion of readings at each well.

5. Clean the NAPL/water level interface probe and cable with a soapy (Alconox) water rinse followed by a solvent rinse (if appropriate based on site-specific constituents of concern) an analyte-free water rinse Contain rinse water in a portable container that will be transferred to an on-site container.

6. Put clean plastic sheeting on the ground next to the well.

7. Unlock and open the well cover while standing upwind from the well. Place the well cap on the plastic sheeting.

8. Locate a measuring reference point on the well casing. If one is not found, initiate a reference point at the highest discernable point on the inner casing (or outer if an inner casing is not present) by notching with a hacksaw, or using an indelible marker. All down-hole measurements will be taken from the reference point established at each well on the inner casing (on the outer only if an inner casing is not present).

9. Measure to the nearest hundredth of a foot and record the height of the inner and outer casings (from reference point, as appropriate) to ground level.

10. Record the inside diameter of the well casing in the field log.

11. If an electronic water level probe is used to measure the water level, lower the probe until it emits a signal (tone and or light) indicating the top of the water surface. Gently raise and lower the instrument through this interface to confirm its depth. Measure and record the depth of the water surface, and the total well depth, to the nearest hundredth of a foot from the reference point at the top of

the well. Lower the probe to the bottom of the well to obtain a total depth measurement.

12. If a NAPL/water interface probe is being used to measure the depth and thickness of NAPL, lower the instrument until it emits a signal (tone and or light) indicating whether LNAPL is present. Continue to lower the NAPL/water level interface probe until it indicates the top of water. Lower the probe to the bottom of the well to obtain a total depth measurement. Note also of the depth indicating the bottom of water and top of DNAPL layer, if any, based on the signal emitted by the interface probe. At each fluid interface, gently raise and lower the instrument through each the interface to confirm its depth. Measure to the nearest hundredth of a foot and record the depth of each fluid interface, and the total well depth, from the reference point.

13. Clean the NAPL/water interface probe and cable in accordance with the appropriate cleaning procedures.

14. If using a bailer to confirm the presence/absence of NAPL, the bailer should either have been previously dedicated to the well, or be a new previously unused bailer.

15. Compare the depth of the well to previous records, and note any discrepancy.

16. Lock the well when all activities are completed.

VII. Waste Management

Decontamination fluids, PPE, and other disposable equipment will be properly stored on site in labeled containers and disposed of properly. Be certain that waste containers are properly labeled and documented in the field log book. Review appropriate waste management SOPs, which may be state- or client-specific.

VIII. Data Recording and Management

Fluid level measurement data will be recorded legibly on “write-in-the-rain” field notebook in indelible pen and/or a PDA. Field situations such as apparent well damage or suspected tampering, or other observations of conditions that may result in compromised data collection will be photographically documented where practicable.

IX. Quality Assurance

As described in the detailed procedure, the electronic water-level meter and/or NAPL-water interface probe will be calibrated prior to use versus an engineer's rule to ensure accurate length demarcations on the tape or cable. Fluid interface measurements will be verified by gently raising and lowering the instrument through each interface to confirm repeatable results.

X. References

No literature references are required for this SOP.

F-16

Standard Groundwater Sampling for Monitoring Wells

ARCADIS
Infrastructure, environment, facilities

Imagine the result

Standard Groundwater Sampling for Monitoring Wells

Rev. #: 1

Rev Date: July 16, 2008

I. Scope and Application

This Standard Operating Procedure (SOP) describes the procedures to be used to collect groundwater samples using traditional purging and sampling techniques. For low-flow purging techniques, please refer to the Low Flow Purging SOP. Monitoring wells must be developed after installation at least 1 week prior to groundwater sample collection. Monitoring wells will not be sampled until the well has been developed. During precipitation events, groundwater sampling will be discontinued until precipitation ceases or a cover has been erected over the sampling area and monitoring well.

Both filtered and unfiltered groundwater samples may be collected using this SOP. Filtered samples may be obtained using a 1.0-, 0.45-, or 0.1-micron disposable filter.

II. Personnel Qualifications

ARCADIS personnel directing, supervising, or leading groundwater sample collection activities should have a minimum of 2 years of previous groundwater sampling experience. Field employees with less than 6 months of experience should be accompanied by a supervisor (as described above) to ensure that proper sample collection techniques are employed.

III. Equipment List

The following materials shall be available, as required, during groundwater sampling:

- site plan of monitoring well locations and site Field Sampling Plan (FSP);
- appropriate health and safety equipment, as specified in the site Health and Safety Plan (HASP);
- photoionization detector (PID) or flame ionization detector (FID), as needed, in accordance with the HASP;
- monitoring well construction logs or tables and historical water level information, if available;
- dedicated plastic sheeting or other clean surface to prevent sample contact with the ground;
- if bailers are to be used in sampling:

  - appropriate dedicated bottom-loading, bottom-emptying bailers (i.e., polyvinyl chloride [PVC], Teflon, or stainless steel);
  - polypropylene rope;
- if submersible pumps are to be used in sampling:
  - dedicated tubing and other equipment necessary for purging;
  - generator or battery for operation of pumps, if required;
  - a pump selected in accordance with the FSP or Work Plan (parameter-specific [e.g., submersible, bladder, peristaltic]);
- graduated buckets to measure purge water;
- water-level or oil/water interface probe, in accordance with the FSP or Work Plan;
- conductivity/temperature/pH meter;
- down-hole dissolved oxygen meter, oxidation reduction potential meter, and/or turbidity meter, if specified in the FSP;
- water sample containers appropriate for the analytical method(s) with preservative, as needed (parameter-specific);
- filter, as needed, in accordance with the analytical method and parameter;
- appropriate blanks (trip blank supplied by the laboratory), as specified in the FSP;
- Ziploc-type freezer bags for use as ice containers;
- appropriate transport containers (coolers) with ice and appropriate labeling, packing, and shipping materials;
- appropriate groundwater sampling log (example attached);
- chain-of-custody forms;
- site map with well locations and groundwater contour maps;

- keys to wells and contingent bolt cutters for rusted locks and replacement keyed-alike locks; and

- drums or other containers for purge water, as specified by the site investigation derived waste (IDW) management plan.

IV. Cautions

If heavy precipitation occurs and no cover over the sampling area and monitoring well can be erected, sampling must be discontinued until adequate cover is provided. Rain water could contaminate groundwater samples.

Remember that field logs and some forms are considered to be legal documents. All field logs and forms should therefore be filled out in indelible ink.

It may be necessary to field filter some parameters (e.g., metals) prior to collection, depending on preservation, analytical method, and project quality objectives.

Check monitoring well logs for use of bentonite pellets. Make note of potential use of bentonite pellets on the groundwater sampling log. Coated bentonite pellets have been found to contaminate monitoring wells with elevated levels of acetone.

Store and/or stage empty and full sample containers and coolers out of direct sunlight.

To mitigate potential cross-contamination, groundwater samples are to be collected in a pre-determined order from least impacted to more impacted based on previous analytical data. If no analytical data are available, samples are to be collected in the following order:

1. First sample the upgradient well(s).

2. Next, sample the well located furthest downgradient of the interpreted or known source.

3. The remaining wells should be progressively sampled in order from downgradient to upgradient, such that the wells closest to the interpreted or known source are sampled last.

Be careful not to over-tighten lids with Teflon liners or septa (e.g., 40 mL vials). Over-tightening can impair the integrity of the seal.

V. Health and Safety Considerations

If thunder or lighting is present, discontinue sampling until 30 minutes have passed after the last occurrence of thunder or lighting.

VI. Procedure

The procedures to sample monitoring wells will be as follows:

1. Don safety equipment, as required in the HASP. Depending on site-specific security and safety considerations, this often must be done prior to entering the work area.

2. Review equipment list (Section III above) to confirm that the appropriate equipment has been acquired.

3. Record site and monitoring well identification on the groundwater sampling log, along with date, arrival time, and weather conditions. Also identify the personnel present, equipment utilized, and other relevant data requested on the log.

4. Label all sample containers with indelible ink.

5. Place plastic sheeting adjacent to the well for use as a clean work area, if conditions allow. Otherwise, prevent sampling equipment from contacting the ground or other surface that could compromise sample integrity.

6. Remove lock from well and if rusted or broken, replace with a new brass keyed-alike lock.

7. Unlock and open the well cover while standing upwind of the well. Remove well cap and place on the plastic sheeting.

8. Set the sampling device,meters, and other sampling equipment on the plastic sheeting. If a dedicated sampling device stored in the well is to be used, this may also be set temporarily on the plastic sheeting, for convenience. However, if a dedicated sampling device is stored below the water table, removing it may compromise water-level data, so water level measurements should be taken prior to removing the device.

9. Obtain a water-level depth and bottom-of-well depth using an electric well probe and record on the groundwater sampling log using indelible ink. Clean the probe(s) after each use in accord with the FSP or the equipment

decontamination SOP.

Note: Water levels may be measured at all wells prior to initiating any sampling activities, depending on FSP requirements.

10. Calculate the number of gallons of water in the well using the length of water column (in feet). Record the well volume on the groundwater sampling log using indelible ink.

11. Remove the required purge volume of water from the well (measure purge water volume in measuring buckets). The required purge volume will be three to five well volumes (the water column in the well screen and casing) unless the well runs dry, in which case, the water that comes into the well will be sampled (USEPA, 1996). In any case, the pumping rate will be decreased during sampling to limit the potential for volatilization of organics potentially present in the groundwater.

12. Field parameter measurements will be periodically collected in accord with FSP specifications. The typical time intervals of field parameter measurement are (1) after each well volume removed, and (2) before sampling. If the field parameters are being measured above-ground (rather than with a downhole probe), then the final pre-sampling parameter measurement should be collected at the reduced flow rate to be used during sampling. The physical appearance of the purged water should be noted on the groundwater sampling log. In addition, water level measurements should be collected and recorded to verify that the well purging is in accord with the guidelines set forth in the previous step.

13. Unless otherwise specified by the applicable regulatory agencies, all purge water will be contained. Contained purge water will be managed in accordance with the FSP or Work Plan. If historical concentrations in the well are less than federal or state regulated concentrations appropriate for current land use, *and permission has been granted by the oversight regulatory agency* to dispose of clean purge water on the ground next to the well(s), then purge water will be allowed to infiltrate into the ground surface downgradient from the monitoring well after the well is sampled.

14. After the appropriate purge volume of groundwater in the well has been removed, or if the well has been bailed dry and allowed to recover, obtain the groundwater sample needed for analysis with the dedicated bailer or from the dedicated sampling tubing, pour the groundwater directly from the sampling device into the appropriate container in the order of volatilization sensitivity of

the parameters sampled, and tightly screw on the cap (snug, but not too tight). The suggested order for sample parameter collection, based on volatilization sensitivity, is presented below:

a. volatile organic compounds (VOCs);

b. semi-volatile organic compounds (SVOCs);

c. polychlorinated biphenyls (PCBs)/pesticides;

d. metals; and

e. wet chemistry.

15. When sampling for volatiles, water samples will be collected directly from the bailer or dedicated tubing into 40 mL vials with Teflon-lined septa.

16. For other analytical samples, sample containers for each analyte type should be filled in the order specified by the FSP. If a bailer is used, then the sample for dissolved metals and/or filtered PCBs should either be placed directly from the bailer into a pressure filter apparatus or pumped directly from the bailer with a peristaltic pump, through an in-line filter, into the pre-preserved sample bottle. If dedicated sample tubing is used, then the filter should be installed in-line just prior to filtered sample collection.

17. If sampling for total and filtered metals and/or PCBs, a filtered and unfiltered sample will be collected. Sample filtration for the filtered sample will be performed in the field utilizing a pump prior to preservation. Attach (clamp) a new 1.0-, 0.45-, or 0.1-micron filter to the discharge tubing of the pump (note the filter flow direction). Turn the pump on and allow 100 mL (or manufacturer recommended amount) of fluid through the filter before sample collection. Dispense the filtered liquid directly into the laboratory sample bottles. If bailers are used for purging and sampling, a proper volume of purge water will be placed in a disposable or decontaminated polyethylene container and pumped through the filter and into the sample container using a peristaltic pump.

18. Place the custody seal around the cap and the sampler container, if required. Note the time on the sample label. Secure with packing material and maintain at approximately 4°C on wet ice contained in double Ziploc-type freezer bags during storage in an insulated, durable transport container.

19. Replace the well cap and lock well, or install a new lock if needed.

20. Record the time sampling procedures were completed on the appropriate field logs (using indelible ink).

21. Complete the procedures for chain-of-custody, handling, packing, and shipping. Chain-of-custody forms should be filled out and checked against the labels on the sample containers progressively after each sample is collected.

22. Place all disposable sampling materials (such as plastic sheeting, disposable tubing or bailers, and health and safety equipment) in appropriate containers.

23. If new locks were installed, forward copies of the keys to the client Project Manager (PM) and ARCADIS PM at the end of the sampling activities.

VII. Waste Management

Purge water will be managed as specified in the FSP or Work Plan, and according to state and/or federal requirements. Personal protective equipment (PPE) and decontaminated fluids will be contained separately and staged at the sampling location. Containers must be labeled at the time of collection. Labels will include date, location(s), site name, city, state, and description of matrix contained (e.g., soil, groundwater, PPE). General guidelines for IDW management are set forth in a separate IDW management SOP.

VIII. Data Recording and Management

Initial field logs and chain-of-custody records will be transmitted to the ARCADIS PM at the end of each day unless otherwise directed by the PM. The groundwater team leader retains copies of the groundwater sampling logs. All field data should be recorded in indelible ink.

IX. Quality Assurance

Field-derived quality assurance blanks will be collected as specified in the FSP, depending on the project quality objectives. Typically, field rinse blanks will be collected when non-dedicated equipment is used during groundwater sampling. Field rinse blanks will be used to confirm that decontamination procedures are sufficient and samples are representative of site conditions. Trip blanks for VOCs, which aid in the detection of contaminates from other media, sources, or the container itself, will be kept with the coolers and the sample containers throughout the sampling activities.

X. References

USEPA. 1986. RCRA Groundwater Monitoring Technical Enforcement Guidance Document (September 1986).

USEPA. 1991. Handbook Groundwater, Volume ii Methodology, Office of Research and Development, Washington, DC. USEPN62S, /6-90/016b (July, 1991).

U.S. Geological Survey (USGS). 1977. National Handbook of Recommended Methods for Water-Data Acquisition: USGS Office of Water Data Coordination. Reston, Virginia.

F-17

Low-Flow Groundwater Purging and Sampling Procedures for Monitoring Wells

ARCADIS
Infrastructure, environment, facilities

Imagine the result

Low-Flow Groundwater Purging and Sampling Procedures for Monitoring Wells

Rev. #: 4

Rev Date: February 2, 2011

I. Scope and Application

Groundwater samples will be collected from monitoring wells to evaluate groundwater quality. The protocol presented in this standard operating procedure (SOP) describes the procedures to be used to purge monitoring wells and collect groundwater samples. This protocol has been developed in accordance with the United States Environmental Protection Agency (USEPA) Region I Low Stress (Low Flow) Purging and Sampling Procedures for the Collection of Groundwater Samples from Monitoring Wells (USEPA SOP No. GW0001; July 30, 1996). Both filtered and unfiltered groundwater samples may be collected using this low-flow sampling method. Filtered samples will be obtained using a 0.45-micron disposable filter. No wells will be sampled until well development has been performed in accordance with the procedures presented in the SOP titled Monitoring Well Development, unless that well has been sampled or developed within the prior 1-year time period. Groundwater samples will not be collected within 1 week following well development.

II. Personnel Qualifications

ARCADIS personnel directing, supervising, or leading groundwater sample collection activities should have a minimum of 2 years of previous groundwater sampling experience. ARCADIS personnel providing assistance to groundwater sample collection and associated activities should have a minimum of 6 months of related experience or an advanced degree in environmental sciences, engineering, hydrogeology, or geology.

The supervisor of the groundwater sampling team will have at least 1 year of previous supervised groundwater sampling experience.

Prior to mobilizing to the field, the groundwater sampling team should review and be thoroughly familiar with relevant site-specific documents including but not limited to the site work plan, field sampling plan, QAPP, HASP, and historical information. Additionally, the groundwater sampling team should review and be thoroughly familiar with documentation provided by equipment manufacturers for all equipment that will be used in the field prior to mobilization.

III. Equipment List

Specific to this activity, the following materials (or equivalent) will be available:

- Health and safety equipment (as required in the site Health and Safety Plan [HASP]).

- Site Plan, well construction records, prior groundwater sampling records (if available).
- Sampling pump, which may consist of one or more of the following:
  - submersible pump (e.g., Grundfos Redi-Flo 2);
  - peristaltic pump (e.g., ISCO Model 150); and/or
  - bladder pump (e.g., Marschalk System 1, QED Well Wizard, Geotech, etc.).
- Appropriate controller and power source for pump:
  - Submersible and peristaltic pumps require electric power from either a generator or a deep cell battery.
  - Submersible pumps such as Grundfos require a pump controller to run the pump
  - Bladder pumps require a pump controller and a gas source (e.g., air compressor or compressed N_2 or CO_2 gas cylinders).
- Teflon® tubing or Teflon®-lined polyethylene tubing of an appropriate size for the pump being used. For peristaltic pumps, dedicated Tygon® tubing (or other type as specified by the manufacturer) will also be used through the pump apparatus.
- Water-level probe (e.g., Solinist Model 101).
- Water-quality (temperature/pH/specific conductivity/ORP/turbidity/dissolved oxygen) meter and flow-through measurement cell. Several brands may be used, including:
  - YSI 6-Series Multi-Parameter Instrument;
  - Hydrolab Series 3 or Series 4a Multiprobe and Display; and/or
  - Horiba U-10 or U-22 Water Quality Monitoring System.
- Supplemental turbidity meter (e.g., Horiba U-10, Hach 2100P, LaMotte 2020). Turbidity measurements collected with multi-parameter meters have been shown to sometimes be unreliable due to fouling of the optic lens of the

turbidity meter within the flow-through cell. A supplemental turbidity meter will be used to verify turbidity data during purging if such fouling is suspected. Note that industry improvements may eliminate the need for these supplemental measurements in the future.

- Appropriate water sample containers (supplied by the laboratory).
- Appropriate blanks (trip blank supplied by the laboratory).
- 0.45-micron disposable filters (if field filtering is required).
- Large glass mixing container (if sampling with a bailer).
- Teflon® stirring rod (if sampling with a bailer).
- Cleaning equipment.
- Groundwater sampling log (attached) or bound field logbook.

Note that in the future, the client may acquire different makes/models of some of this equipment if the listed makes/models are no longer available, or as a result of general upgrades or additional equipment acquisitions. In the event that the client uses a different make/model of the equipment listed, the client will use an equivalent type of equipment (e.g., pumps, flow-through analytical cells) and note the specific make/model of the equipment used during a sampling event on the groundwater sampling log. In addition, should the client desire to change to a markedly different sampling methodology (e.g., discrete interval samplers, passive diffusion bags, or a yet to be developed technique), the client will submit a proposed SOP for the new methodology for USEPA approval prior to implementing such a change.

The maintenance requirements for the above equipment generally involve decontamination or periodic cleaning, battery charging, and proper storage, as specified by the manufacturer. For operational difficulties, the equipment will be serviced by a qualified technician.

IV. Cautions

If heavy precipitation occurs and no cover over the sampling area and monitoring well can be erected, sampling must be discontinued until adequate cover is provided. Rain water could contaminate groundwater samples.

Do not use permanent marker or felt-tip pens for labels on sample container or sample coolers – use indelible ink. The permanent markers could introduce volatile constituents into the samples.

It may be necessary to field filter some parameters (e.g., metals) prior to collection, depending on preservation, analytical method, and project quality objectives.

Store and/or stage empty and full sample containers and coolers out of direct sunlight.

To mitigate potential cross-contamination, groundwater samples are to be collected in a pre-determined order from least impacted to impacted based on previous analytical data. If no analytical data are available, samples are collected in order of upgradient, then furthest downgradient to source area locations.

Be careful not to over-tighten lids with Teflon liners or septa (e.g., 40 mL vials). Over-tightening can cause the glass to shatter or impair the integrity of the Teflon seal.

V. Health and Safety Considerations

Use caution and appropriate cut resistant gloves when tightening lids to 40 mL vials. These vials can break while tightening and can lacerate hand. Amber vials (thinner glass) are more prone to breakage.

If thunder or lighting is present, discontinue sampling and take cover until 30 minutes have passed after the last occurrence of thunder or lighting.

Use caution when removing well caps as well may be under pressure, cap can dislodge forcefully and cause injury.

Use caution when opening protective casing on stickup wells as wasps frequently nest inside the tops of the covers. Also watch for fire ant mounds near well pads when sampling in the south or western U.S.

VI. Procedure

Groundwater will be purged from the wells using an appropriate pump. Peristaltic pumps will initially be used to purge and sample all wells when applicable. If the depth to water is below the sampling range of a peristaltic pump (approximately 25 feet), submersible pumps or bladder pumps will be used provided the well is constructed with a casing diameter greater than or equal to 2 inches (the minimum well diameter capable of accommodating such pumps). Bladder pumps are preferred over peristaltic and submersible pumps if sampling of VOCs is required to prevent volatilization. For smaller diameter wells where the depth to water is below the sampling range of a

peristaltic pump, alternative sampling methods (i.e., bailing or small diameter bladder pumps) will be used to purge and sample the groundwater. Purge water will be collected and containerized.

1. Calibrate field instruments according to manufacturer procedures for calibration.

2. Measure initial depth to groundwater prior to placement of pumps.

3. Prepare and install pump in well: For submersible and non-dedicated bladder pumps, decontaminate pump according to site decontamination procedures. Non-dedicated bladder pumps will require a new Teflon® bladder and attachment of an air line, sample discharge line, and safety cable prior to placement in the well. Attach the air line tubing to the air port on the top of the bladder pump. Attach the sample discharge tubing to the water port on the top of the bladder pump. Care should be taken not to reverse the air and discharge tubing lines during bladder pump set-up as this could result in bladder failure or rupture. Attach and secure a safety cable to the eyebolt on the top of bladder pump (if present, depending on pump model used). Slowly lower pump, safety cable, tubing, and electrical lines into the well to a depth corresponding to the approximate center of the saturated screen section of the well. Take care to avoid twisting and tangling of safety cable, tubing, and electrical lines while lowering pump into well; twisted and tangled lines could result in the pump becoming stuck in the well casing. Also, make sure to keep tubing and lines from touching the ground or other surfaces while introducing them into the well as this could lead to well contamination. If a peristaltic pump is being used, slowly lower the sampling tubing into the well to a depth corresponding to the approximate center of the saturated screen section of the well. The pump intake or sampling tube must be kept at least 2 feet above the bottom of the well to prevent mobilization of any sediment present in the bottom of the well.

4. If using a bladder pump, connect the air line to the pump controller output port. The pump controller should then be connected to a supply line from an air compressor or compressed gas cylinder using an appropriate regulator and air hose. Take care to tighten the regulator connector onto the gas cylinder (if used) to prevent leaks. Teflon tape may be used on the threads of the cylinder to provide a tighter seal. Once the air compressor or gas cylinder is connected to the pump controller, turn on the compressor or open the valve on the cylinder to begin the gas flow. Turn on the pump controller if an on/off switch is present and verify that all batteries are charged and fully operating before beginning to pump.

5. Connect the pump discharge water line to the bottom inlet port on the flow-through cell connected to the water quality meter.

6. Measure the water level again with the pump in the well before starting the pump. Start pumping the well at 200 to 500 milliliters (mL) per minute (or at lower site-specific rate if specified). The pump rate should be adjusted to cause little or no water level drawdown in the well (less than 0.3 feet below the initial static depth to water measurement) and the water level should stabilize. The water level should be monitored every 3 to 5 minutes (or as appropriate, lower flow rates may require longer time between readings) during pumping if the well diameter is of sufficient size to allow such monitoring. Care should be taken not to break pump suction or cause entrainment of air in the sample. Record pumping rate adjustments and depths to water. If necessary, pumping rates should be reduced to the minimum capabilities of the pump to avoid pumping the well dry and/or to stabilize indicator parameters. A steady flow rate should be maintained to the extent practicable. Groundwater sampling records from previous sampling events (if available) should be reviewed prior to mobilization to estimate the optimum pumping rate and anticipated drawdown for the well in order to more efficiently reach a stabilized pumping condition.

   If the recharge rate of the well is very low, alternative purging techniques should be used, which will vary based on the well construction and screen position. For wells screened across the water table, the well should be pumped dry and sampling should commence as soon as the volume in the well has recovered sufficiently to permit collection of samples. For wells screened entirely below the water table, the well should be pumped until a stabilized level (which may be below the maximum displacement goal of 0.3 feet) can be maintained and monitoring for stabilization of field indicator parameters can commence. If a lower stabilization level cannot be maintained, the well should be pumped until the drawdown is at a level slightly higher than the bentonite seal above the well screen. Sampling should commence after one well volume has been removed and the well has recovered sufficiently to permit collection of samples.

   During purging, monitor the field indicator parameters (e.g., turbidity, temperature, specific conductance, pH, etc.) every 3 to 5 minutes (or as appropriate). Field indicator parameters will be measured using a flow-through analytical cell or a clean container such as a glass beaker. Record field indicator parameters on the groundwater sampling log. The well is considered stabilized and ready for sample collection when turbidity values remain within 10% (or within 1 NTU if the turbidity reading is less than 10 NTU), the specific conductance and temperature values remain within 3%, ORP readings remain within ± 10 mV and pH remains within 0.1 units for three consecutive readings collected at 3- to 5-minute intervals (or other appropriate interval, alternate stabilization goals may exist in different geographic regions, consult the site-specific Work Plan for stabilization criteria). If the field indicator parameters do not stabilize within 1 hour of the start of purging, but the groundwater turbidity is

below the goal of 50 NTU and the values for all other parameters are within 10%, the well can be sampled. If the parameters have stabilized but the turbidity is not in the range of the 50 NTU goal, the pump flow rate should be decreased to a minimum rate of 100 mL/min to reduce turbidity levels as low as possible. Dissolved oxygen is extremely susceptible to various external influences (including temperature or the presence of bubbles on the DO meter); care should be taken to minimize the agitation or other disturbance of water within the flow-through cell while collecting these measurements. If air bubbles are present on the DO probe or in the discharge tubing, remove them before taking a measurement. If dissolved oxygen values are not within acceptable range for the temperature of groundwater (Attachment 1), then again check for and remove air bubbles on probe before re-measuring. If the dissolved oxygen value is 0.00 or less, then the meter should be serviced and re-calibrated. If the dissolved oxygen values are above possible results, then the meter should be serviced and re-calibrated.

During extreme weather conditions, stabilization of field indicator parameters may be difficult to obtain. Modifications to the sampling procedures to alleviate these conditions (e.g., measuring the water temperature in the well adjacent to the pump intake) will be documented in the field notes. If other field conditions exist that preclude stabilization of certain parameters, an explanation of why the parameters did not stabilize will also be documented in the field logbook.

7. Complete the sample label(s) and cover the label(s) with clear packing tape to secure the label onto the container.

8. After the indicator parameters have stabilized, collect groundwater samples by diverting flow out of the unfiltered discharge tubing into the appropriate labeled sample container. If a flow-through analytical cell is being used to measure field parameters, the flow-through cell should be disconnected after stabilization of the field indicator parameters and prior to groundwater sample collection. Under no circumstances should analytical samples be collected from the discharge of the flow-through cell. When the container is full, tightly screw on the cap. Samples should be collected in the following order: VOCs, TOC, SVOCs, metals and cyanide, and others (or other order as defined in the site-specific Work Plan).

9. If sampling for total and filtered metals and/or PCBs, a filtered and unfiltered sample will be collected. Install an in-line, disposable 0.45-micron particle filter on the discharge tubing after the appropriate unfiltered groundwater sample has been collected. Continue to run the pump until an initial volume of “flush” water has been run through the filter in accordance with the manufacturer’s directions (generally 100 to 300 mL). Collect filtered groundwater sample by diverting flow

out of the filter into the appropriately labeled sample container. When the container is full, tightly screw on the cap.

10. Secure with packing material and store at 4°C in an insulated transport container provided by the laboratory.

11. Record on the groundwater sampling log or bound field logbook the time sampling procedures were completed, any pertinent observations of the sample (e.g., physical appearance, and the presence or lack of odors or sheens), and the values of the stabilized field indicator parameters as measured during the final reading during purging (Attachment 2 – Example Sampling Log).

12. Turn off the pump and air compressor or close the gas cylinder valve if using a bladder pump set-up. Slowly remove the pump, tubing, lines, and safety cable from the well. Do not allow the tubing or lines to touch the ground or any other surfaces which could contaminate them. .

13. If tubing is to be dedicated to a well, it should be folded to a length that will allow the well to be capped and also facilitate retrieval of the tubing during later sampling events. A length of rope or string should be used to tie the tubing to the well cap. Alternatively, if tubing and safety line are to be saved and reused for sampling the well at a later date they may be coiled neatly and placed in a clean plastic bag that is clearly labeled with the well ID. Make sure the bag is tightly sealed before placing it in storage.

14. Secure the well and properly dispose of personal protective equipment (PPE) and disposable equipment.

15. Complete the procedures for packaging, shipping, and handling with associated chain-of-custody.

16. Complete decontamination procedures for flow-through analytical cell and submersible or bladder pump, as appropriate.

17. At the end of the day, perform calibration check of field instruments.

If it is not technically feasible to use the low-flow sampling method, purging and sampling of monitoring wells may be conducted using the bailer method as outlined below:

1. Don appropriate PPE (as required by the HASP).

2. Place plastic sheeting around the well.

3. Clean sampling equipment.

4. Open the well cover while standing upwind of the well. Remove well cap and place on the plastic sheeting. Insert PID probe approximately 4 to 6 inches into the casing or the well headspace and cover with gloved hand. Record the PID reading in the field log. If the well headspace reading is less than 5 PID units, proceed; if the headspace reading is greater than 5 PID units, screen the air within the breathing zone. If the breathing zone reading is less than 5 PID units, proceed. If the PID reading in the breathing zone is above 5 PID units, move upwind from well for 5 minutes to allow the volatiles to dissipate. Repeat the breathing zone test. If the reading is still above 5 PID units, don appropriate respiratory protection in accordance with the requirements of the HASP. Record all PID readings. For wells that are part of the regular weekly monitoring program and prior PID measurements have not resulted in a breathing zone reading above 5 PID units, PID measurements will be taken monthly.

5. Measure the depth to water and determine depth of well by examining drilling log data or by direct measurement. Calculate the volume of water in the well (in gallons) by using the length of the water column (in feet), multiplying by 0.163 for a 2-inch well or by 0.653 for a 4-inch well. For other well diameters, use the formula:

   Volume (in gallons) = π TIMES well radius (in feet) squared TIMES length of water column (in feet) TIMES 7.481 (gallons per cubic foot)

6. Measure a length of rope or twine at least 10 feet greater than the total depth of the well. Secure one end of the rope to the well casing and secure the other end to the bailer. Test the knots and make sure the rope will not loosen. Check bailers so that all parts are intact and will not be lost in the well.

7. Lower bailer into well and remove one well volume of water. Contain all water in appropriate containers.

8. Monitor the field indicator parameters (e.g., turbidity, temperature, specific conductance, and pH). Measure field indicator parameters using a clean container such as a glass beaker or sampling cups provided with the instrument. Record field indicator parameters on the groundwater sampling log.

9. Repeat Steps 7 and 8 until three or four well volumes have been removed. Examine the field indicator parameter data to determine if the parameters have stabilized. The well is considered stabilized and ready for sample collection when turbidity values remain within 10% (or within 1 NTU if the turbidity reading is less than 10 NTU), the specific conductance and temperature values remain

within 3%, and pH remains within □0.1 units for three consecutive readings collected once per well volume removed.

10. If the field indicator parameters have not stabilized, remove a maximum of five well volumes prior to sample collection. Alternatively, five well volumes may be removed without measuring the field indicator parameters.

11. If the recharge rate of the well is very low, wells screened across the water table may be bailed dry and sampling should commence as soon as the volume in the well has recovered sufficiently to permit collection of samples. For wells screened entirely below the water table, the well should only be bailed down to a level slightly higher than the bentonite seal above the well screen. The well should not be bailed completely dry, to maintain the integrity of the seal. Sampling should commence as soon as the well volume has recovered sufficiently to permit sample collection.

12. Following purging, allow water level in well to recharge to a sufficient level to permit sample collection.

13. Complete the sample label and cover the label with clear packing tape to secure the label onto the container.

14. Slowly lower the bailer into the screened portion of the well and carefully retrieve a filled bailer from the well causing minimal disturbance to the water and any sediment in the well.

15. The sample collection order (as appropriate) will be as follows:

    a. VOCs;

    b TOC;

    c. SVOCs;

    d. metals and cyanide; and

    e. others.

16. When sampling for volatiles, collect water samples directly from the bailer into 40-mL vials with Teflon®-lined septa.

17. For other analytical samples, remove the cap from the large glass mixing container and slowly empty the bailer into the large glass mixing container. The

sample for dissolved metals and/or filtered PCBs should either be placed directly from the bailer into a pressure filter apparatus or pumped directly from the bailer with a peristaltic pump, through an in-line filter, into the pre-preserved sample bottle.

18. Continue collecting samples until the mixing container contains a sufficient volume for all laboratory samples.

19. Mix the entire sample volume with the Teflon® stirring rod and transfer the appropriate volume into the laboratory jar(s). Secure the sample jar cap(s) tightly.

20. If sampling for total and filtered metals and/or PCBs, a filtered and unfiltered sample will be collected. Sample filtration for the filtered sample will be performed in the field using a peristaltic pump prior to preservation. Install new medical-grade silicone tubing in the pump head. Place new Teflon® tubing into the sample mixing container and attach to the intake side of pump tubing. Attach (clamp) a new 0.45-micron filter (note the filter flow direction). Turn the pump on and dispense the filtered liquid directly into the laboratory sample bottles.

21. Secure with packing material and store at 4°C in an insulated transport container provided by the laboratory.

22. After sample containers have been filled, remove one additional volume of groundwater. Measure the pH, temperature, turbidity, and conductivity. Record on the groundwater sampling log or bound field logbook the time sampling procedures were completed, any pertinent observations of the sample (e.g., physical appearance, and the presence or lack of odors or sheens), and the values of the field indicator parameters.

23. Remove bailer from well, secure well, and properly dispose of PPE and disposable equipment.

24. If a bailer is to be dedicated to a well, it should be secured inside the well above the water table, if possible. Dedicated bailers should be tied to the well cap so that inadvertent loss of the bailer will not occur when the well is opened.

25. Complete the procedures for packaging, shipping, and handling with associated chain-of-custody.

VII. Waste Management

Materials generated during groundwater sampling activities, including disposable equipment, will be placed in appropriate containers. Containerized waste will be disposed of by the client consistent with the procedures identified in the HASP.

VIII. Data Recording and Management

Initial field logs and chain-of-custody records will be transmitted to the ARCADIS PM at the end of each day unless otherwise directed by the PM. The groundwater team leader retains copies of the groundwater sampling logs.

IX. Quality Assurance

In addition to the quality control samples to be collected in accordance with this SOP, the following quality control procedures should be observed in the field:

- Collect samples from monitoring wells in order of increasing concentration, to the extent known based on review of historical site information if available.
- Equipment blanks should include the pump and tubing (if using disposable tubing) or the pump only (if using tubing dedicated to each well).
- Collect equipment blanks after wells with higher concentrations (if known) have been sampled.
- Operate all monitoring instrumentation in accordance with manufacturer's instructions and calibration procedures. Calibrate instruments at the beginning of each day and verify the calibration at the end of each day. Record all calibration activities in the field notebook.
- Clean all groundwater sampling equipment prior to use in the first well and after each subsequent well using procedures for equipment decontamination.

X. References

United States Environmental Protection Agency (USEPA). 1986. RCRA Groundwater Monitoring Technical Enforcement Guidance Document (September 1986).

USEPA Region II. 1998. *Ground Water Sampling Procedure Low Stress (Low Flow) Purging and Sampling*.

USEPA. 1991. Handbook Groundwater, Volume II Methodology, Office of Research and Development, Washington, DC. USEPN62S, /6-90/016b (July, 1991).

U.S. Geological Survey (USGS). 1977. National Handbook of Recommended Methods for Water-Data Acquisition: USGS Office of Water Data Coordination. Reston, Virginia.

Attachment 1

Groundwater Sampling Log

ARCADIS

WATER SAMPLING LOG

Project No. _____ Date _____

Site Location: _____ Monitoring Well Number_____

Rep./Field Blank No._____ Sample Collection Time_____

Weather_____ Sampling Method _____

Evacuation Data:

Depth to bottom of well (ft bls) _____ Casing stickup height (feet)_____

Depth to water from top of casing _____ Screened Interval (ft bls) _____

Water Column ___ (ft) Gallons in well_____ Casing Diameter: _____

Evacuation Volume (x 3) = _____ Casing Volume 1”=0.04 gal gal/ft, 2”=0.16 gal/ft

Field Parameters:

Time	Gallons Purged	Temp (°C)	pH (SU)	DO (mg/L)	Spec. Cond. (μmhos/cm)	Turb (NTU)	Redox (mV)	Depth to Water (ft)

Analyses:

Analytical Parameter	Sample Bottles	Preservative

Remarks_____

_____

Sampling Personnel _____

Attachment 2

Oxygen Solubility in Fresh Water

Temperature (degrees C)	**Dissolved Oxygen** (mg/L)
0	14.6
1	14.19
2	13.81
3	13.44
4	13.09
5	12.75
6	12.43
7	12.12
8	11.83
9	11.55
10	11.27
11	11.01
12	10.76
13	10.52
14	10.29
15	10.07
16	9.85
17	9.65
18	9.45
19	9.26
20	9.07
21	8.9
22	8.72
23	8.56
24	8.4
25	8.24
26	8.09
27	7.95
28	7.81
29	7.67
30	7.54
31	7.41
32	7.28
33	7.16
34	7.05
35	6.93

Reference: Vesilind, P.A., *Introduction to Environmental Engineering*, PWS Publishing Company, Boston, 468 pages (1996).

F-18

Groundwater Sampling with HydraSleeves™

ARCADIS
Infrastructure, environment, buildings

Imagine the result

Groundwater Sampling with HydraSleeves™ – Standard Operating Procedure

Rev. #: 2

Rev Date: February 2011

I. Scope and Application

This Standard Operating Procedure (SOP) establishes guidelines and procedures for use by field personnel in the deployment of HydraSleeves™ and subsequent collection and documentation of groundwater samples for chemical analysis. Proper collection procedures are necessary to assure the quality and integrity of all groundwater samples. The details within this SOP should be used in conjunction with site-specific work plans.

The HydraSleeve™ groundwater sampler can be used to collect a representative sample for most physical and chemical parameters without purging the well. It collects a groundwater sample from a user-defined interval (typically within the well screen), without mixing fluid from other intervals. The HydraSleeve™ is placed within the screened interval of the monitoring well, and a period of time is allocated for the well to re-equilibrate following HydraSleeve™ down-hole deployment. The sealed HydraSleeve™ can be activated and removed for sample collection within several hours to several months. When activated, the HydraSleeve™ collects a sample with no drawdown and minimal agitation or displacement of the water column. Once the sampler is full, the one-way reed valve collapses, preventing mixing of extraneous, non-representative fluid during HydraSleeve™ recovery from the well.

Use of this SOP will provide samples for Level III and Level IV analytical data for use in risk assessments, site characterizations, evaluation of remediation alternatives, engineering design of remediation activities, and in support during remediation activities.

II. Personnel Qualifications

All personnel shall meet the requirements of the site-specific Health and Safety Plan (HASP).

The Project Manager is responsible for ensuring that all sample collection activities are conducted in accordance with this SOP and any other appropriate procedures. This will be accomplished through staff training and by maintaining quality assurance/quality control (QA/QC).

The Field Manager is responsible for periodic observation of field activities and review of field generated documentation associated with this SOP. The Field Manager is also responsible for implementation of corrective action (e.g., retraining personnel, additional review of work plans and SOPs, variances to QC sampling requirements, issuing non-conformances, etc.) if problems occur.

Field personnel assigned to collect groundwater samples are responsible for completing their tasks according to specifications outlined in this SOP and other appropriate procedures. Field staff shall have prior experience in groundwater sampling. The determination of placement of the HydraSleeve™ in the monitoring well shall be made by a qualified geoscientist. All staff are responsible for reporting deviations from procedures in the Field Activity Daily Log, and to the Field Manager or Project Manager.

III. Equipment List

There are three main steps for collecting groundwater samples with HydraSleeves™: 1) assembly and deployment of the HydraSleeve™, 2) collecting the groundwater samples after the equilibration period, 3) and pouring the groundwater samples into containers. The equipment needed for each step is listed below.

Equipment needed for assembly and deployment of the HydraSleeves™:

- Appropriate personal protective equipment (PPE)
- Well location maps and table identifying HydraSleeve™ deployment locations/depths
- Well keys
- Flame ionization detector (FID) (as appropriate)
- Photoionization detector (PID) (as appropriate)
- Electronic water-level indicator, 0.01 ft accuracy
- Oil/water interface probe (as appropriate)
- Plastic sheeting to protect all down-hole sampling equipment from contact with potential sources of contamination.
- Decontamination equipment
- Appropriate size HydraSleeves™ for the wells being sampled. Some examples are provided below. Check the manufacturer's website for additional options:
    - 2-L 2" HydraSleeve™ SuperSleeve (SS) (1.9" OD, 60" long; volume of 2 liters; requires special 2-piece top weight) for 2" Schedule 40 wells

- 1-L 2” HydraSleeve™ (1.75” OD, 36” long; volume of 1 liter) for 2” wells
- 1.5” HydraSleeve™ (1.5” OD, 30” long; volume of 625 mL) for 1.5” wells
- 1” HydraSleeve™ (1” OD, 48” long; volume of 325 mL) for wells less than 1.5”

- 1/8-inch diameter braided polypropylene rope (for tethers)
- Weights (stainless steel or other inert material) to anchor HydraSleeves™ in wells (note special weights are required for SuperSleeve-style HydraSleeves™)
- Cable ties to anchor HydraSleeves™ to tether
- Measuring tape
- Cutting implement, such as scissor or knife
- Approved site-specific workplan, Field Sampling Plan (FSP), and HASP

Equipment needed for collection/dispensing of groundwater samples:

- Appropriate PPE
- Planned Sample Table (PST), sample labels, and Chain of Custody forms (COC)
- Sample bottles, coolers, ice
- Blank collection field forms
- Well keys, site maps, and sample list
- Electronic water-level indicator, 0.01 ft accuracy
- Oil/Water interface probe (as appropriate)
- Decontamination equipment

- Plastic sheeting to protect all down-hole sampling equipment from contact with potentialsources of contamination.
- Bucket or other container to hold extra groundwater
- Additional HydraSleeves™ and zip ties to deploy for the next sampling event, as appropriate
- Approved site-specific workplan, FSP, and HASP

Unless otherwise specified in the site-specific workplan, it is advisable to establish a sampling order starting with the least contaminated well and progressing to the most contaminated last.

IV. Cautions

Selection of the appropriate size HydraSleeve™ depends on sample volume requirements, well diameter, and the length of the saturated screened interval (which dictates the maximum distance allowed over which to pull and fill the HydraSleeve™). The largest HydraSleeve™ (60-inch) holds 2 liters of sample; the smallest holds 325 mL of sample. The sample volume requirements must be verified with the laboratory before deploying the HydraSleeve™ samplers. The HydraSleeve™ sampler is designed for single use (deployment and sample collection) only; tethers and weights should be reused after proper decontamination.

According to the manufacturer, HydraSleeve™ has been used successfully with no equilibration period at some sites for some analytical parameters. HydraSleeve™ does not require dissolved compounds to diffuse across a membrane as in the case of polyethylene diffusion bag (PDB) samplers (ITRC, 2004). Because the HydraSleeve™ mechanically obtains a “core” of the water column, rather than relying on diffusion through a membrane, the HydraSleeve™ sampler can be retrieved shortly after deployment in many cases. One way to conservatively estimate the maximum required equilibration period is to estimate the flush-out period for the well based on the Darcy velocity within the formation (hydraulic conductivity times gradient) (Attachment B). It should be noted, however, that representative groundwater sampling may occur with a shorter flushing period, or no flushing period, if the well contains minimal accumulated silt and care is taken to minimize well disturbance during HydraSleeve™ deployment. Site-specific testing versus another accepted groundwater sampling method can be performed at a subset of wells – preferably spanning a range of hydraulic conductivity, geologic materials, and chemical concentrations – to verify that the HydraSleeve™ device produces samples similar to those obtained from the other accepted method.

V. Health and Safety Considerations

The HASP will be followed at all times. Appropriate personal protective equipment (PPE) will be worn at all times. Other safety considerations include exposure to contaminated groundwater or non aqueous phase liquid (NAPL) and using sharp cutting tools (scissors, knife).

VI. Procedure

Field personnel will perform deployment of the HydraSleeves™ in accordance with the following procedures.

Preliminary Site Activities

1. Visually inspect the well to ensure that it is undamaged, properly labeled and secured. Damage or other conditions that may affect the integrity of the well will be recorded on the Field Activity Daily Log and brought to the attention of the Field Manager or Project Manager.

2. Equipment will either be new or decontaminated in accordance with SOPs prior to use.

3. Lay out plastic sheeting and set up monitoring and sampling equipment.

4. Don appropriate PPE.

5. If specified in the site-specific workplan, measure volatile organic compounds (VOCs) at the rim of the unopened well with a PID and FID and record the reading in the field logbook.

6. Observe if any air is flowing into or out of the casing (e.g., bubbles, hissing sounds). In the event such conditions are observed, they should be noted on the HydraSleeve™ Field Form (Attachment A).

7. Remove well cap.

8. If specified in the site-specific workplan, measure VOCs at the rim of the well with a PID and FID instrument record the reading in the field logbook.

9. If the well casing does not have a reference point (usually a V-cut or indelible mark in the well casing), make one. Record all measurements from this mark.

10. If specified in the site-specific workplan, determine if non-aqueous phase liquid (NAPL) is present in the well using an oil/water interface probe in accordance with SOPs. If NAPL is present, record the depth to NAPL and static water level on the HydraSleeve™ Field Form. A HydraSleeve™ will not be deployed nor will samples be collected from wells where NAPL is present. If NAPL is not present, measure the static water level followed by the total depth of the well with an electronic interface probe, and record the measurements on the HydraSleeve™ Field Form.

11. Measure and record the depth to water and the total depth of the groundwater monitoring well (to 0.01 ft) in all wells to be sampled. Care should be taken to minimize disturbance to the water column and to any particulates attached to the sides or at the bottom of the well.

12. Determine the total depth of the well. Compare the measurement of the total depth of the well with the previous measurement and check against the well construction logs to determine the percent of screen occluded by sediment (if any). If more than 20 percent of a well screen is occluded by sediment, the well will not be sampled until it is re-developed.

Assembly and Deployment of Standard HydraSleeves ™

1. Begin assembling the HydraSleeve™ by removing the HydraSleeve™ from the package and grasp top to “pop” open (Figure 1). Squeeze side fins together at top to bend reinforcing strips outward (Figure 2). Attach rope to hole at top of HydraSleeve™ (using cable ties) (Figure 3). Fold the two holes at bottom of HydraSleeve™ together and attach weight (using zip tie) (Figure 4). Sampler is ready to insert into the well at the predetermined depth specified in the site-specific workplan (Figure 5).

Figure 1

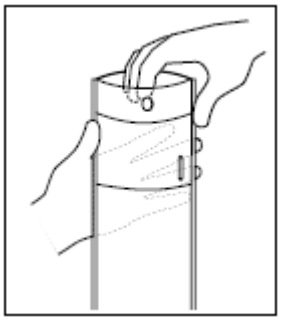

Figure 2

Figure 3

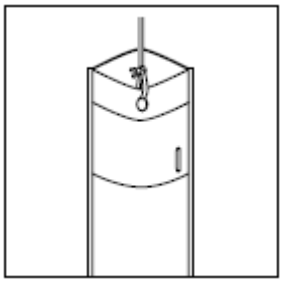

Figure 4

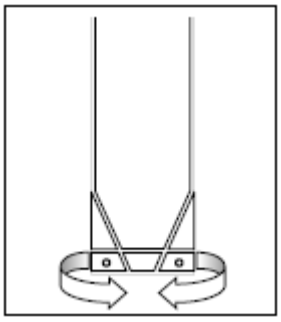

Figure 5

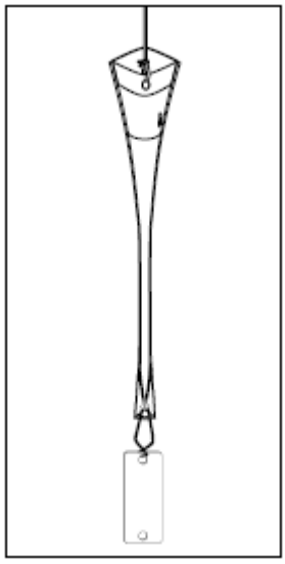

2. Two methods of deployment can be used. Either way, the top of the HydraSleeve™ will be positioned below the midpoint of the saturated screened interval by a distance approximately equal to 0.75 times the full length of the HydraSleeve™. For example, a 36” HydraSleeve™ will be lowered so that the top of the HydraSleeve™ is approximately 27” below the midpoint of the saturated screened interval. This position is appropriate to collect the groundwater sample from approximately the middle of the saturated screened interval when the HydraSleeve™ is pulled upward.

   a. Bottom Anchor Deployment (preferred). Using the determined well depth, calculate the distance from the bottom of the well to the desired sampling depth (specified on the HydraSleeve™ Field Form. Attach an appropriate length anchor line between the weight and the bottom of the sampler and *slowly* lower the assembly until the weight rests on the bottom of the well, allowing the top of the sampler to float at the correct sampling depth. Attach the suspension line to the well cap to suspend the HydraSleeve™ at the correct depth until activated for sampling. Allow sufficient extra tether length such that if the tether becomes untied from the well cap and the sampler sinks to the bottom it may still be easily retrieved.

   b. Top-Down Deployment. Measure the correct amount of suspension line needed to "hang" the top of the

HydraSleeve™(s) at the desired sampling depth (specified on the HydraSleeve™ Field Form). Once constructed, slowly lower the assembly in the well and attach the suspension line to the well cap to suspend the HydraSleeve™ at the correct depth until activated for sampling. Allow sufficient extra tether length such that if the tether becomes untied from the well cap and the sampler sinks to the bottom it may still be easily retrieved.

3. For wells in which another passive sampling device (e.g., passive diffusion bag [PDB]) is to be used concurrently, the HydraSleeve™ should be suspended from the same line directly beneath the other passive sampler. If the top-down deployment method is used, care should be taken to ensure the weight is not resting on the bottom of the well. If necessary, the weight may be placed at the top of the HydraSleeve™, as described below.

4. For wells with screen lengths less than 10 feet (specified on the HydraSleeve™ Field Form) or where the saturated screen length is less than 10 feet (determined during water level gauging), top-down deployment will be used as described above with the exception of the placement of the weight. The weight for these wells will be placed on the top of the HydraSleeve™ as shown in the figure below (Photo 1). The hanging clip is inserted locking the top of the HydraSleeve™ and the weight together. The tether will be attached to the apex of the clip, as shown below (Photo 2).

Photo 1

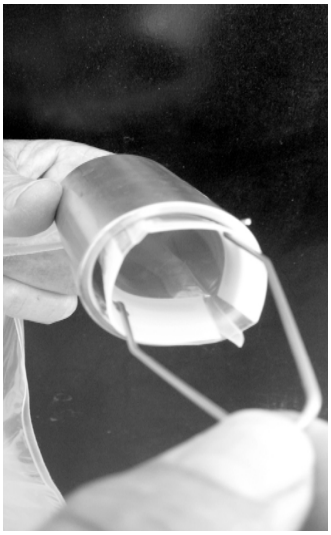

Photo 2

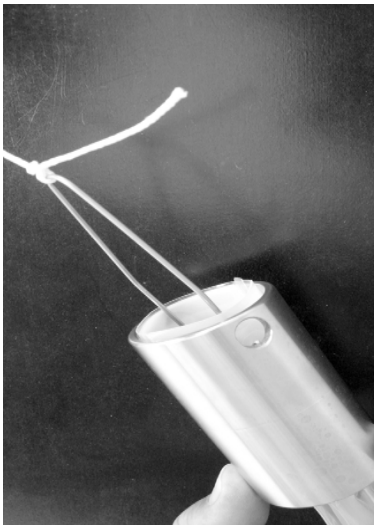

5. At this point deployment is complete. The well must be allowed time for the stabilization of well water and formation water following any disturbance caused by the sampler deployment before groundwater samples can be collected. The manufacturer's recommended deployment time is hours to months. The time shall be specified in the site-specific workplan. The maximum deployment time at the site will be one year.

6. After the equilibration period is complete; the groundwater samples are ready to be collected for analysis.

Assembly and Deployment of SuperSleeve-style HydraSleeve™ SS

1. Begin assembling the HydraSleeve™ by removing the HydraSleeve™ SS from the package and attaching the bottom weight (Photos 3 and 4). Fold the two holes at bottom of HydraSleeve™ together. Open prongs of bottom weight clip by squeezing. Insert reusable weight clip through holes and attach the bottom weight.

Photo 3

Photo 4

2. Attach the top weight as follows: Insert the open (check valve) end of the HydraSleeve™ SS through the bottom of the stainless steel portion of top weight until about 1/2 inch of the open sleeve protrudes above the female threads. Thread stainless steel weight (female thread) onto PVC top piece (male thread) locking the top of the HydraSleeve SS between the threads (Photo 5).

Photo 5

3. Attach rope to top weight (using cable ties).

4. Sampler is ready to insert into the well (Photo 6). Lower the HydraSleeve SS into the well until the bottom weight touches the bottom. Provide enough slack to allow the top weight to fully compress the sampler into the bottom of the well. For example, the 2-liter HydraSleeve™ SS (5-feet long) will compress to within 2 feet of bottom of a 2-inch well screen in about 4 hours. The 2-liter HydraSleeve™ SS requires about 5 feet of water over the top of the sampler to completely fill; thus it should not be used in wells with shorter than a 10-ft saturated screen length.

Photo 6

Collecting Groundwater Samples from HydraSleeves™

1. Conduct the Preliminary Site Activities detailed above with the following exception: The depth to groundwater should be collected prior to retrieval of the HydraSleeve™, while the total well depth should be collected only after the HydraSleeve™ has been retrieved from the well.

2. The Continuous Pull method is preferred and will be used for the majority of the wells. If the well to be sampled has a saturated screen length less than 10 feet in length, the Short Strokes method may be used. However, to minimize disturbance of well sediments, a preferable alternative is to use a top-weighted HydraSleeve deployment method (standard style HydraSleeve™ or SuperSleeve). The HydraSleeve™ Field Form will state the screen length and sample collection method for each well.

   a. Continuous Pull method – The HydraSleeve™ must move upward at an approximate rate of one foot per second or faster (about the speed a bailer is usually pulled upward) for water to pass through the check valve into the sample sleeve. The total upward distance the check valve must travel to fill the sample sleeve is about 1 to 2 times the length of the sampler. For example, a 36-inch HydraSleeve™ needs a total upward movement of 36 to no more than 72 inches to fill. Pull the HydraSleeve™ continuously upward from its starting point at a constant 1 to 2 feet per second until full. This method usually provides the least turbid samples and is analogous to coring the water column from the bottom up (Figure 6).

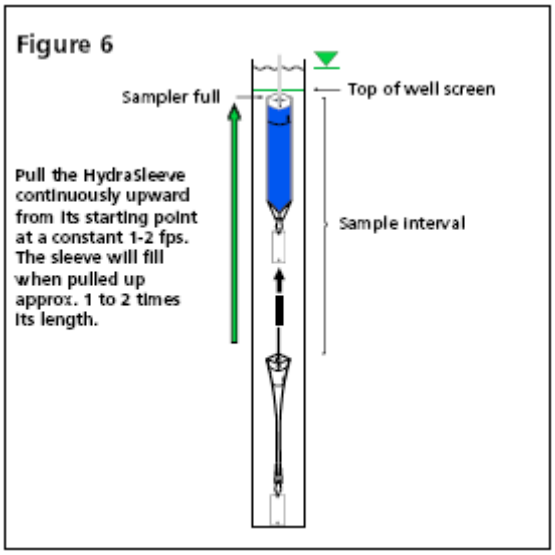

b. Short Strokes method – Pull the sampler upward at about 1 to 2 feet per second for the length of the sampler (36 inches) and let it drop back to the starting point. Repeat the cycle 3 to 5 times (Figure 7).

3. If the HydraSleeve™ is retrieved from the well and is not completely full, the sample will not be collected and a new HydraSleeve™ will be deployed. The replacement HydraSleeve™ will be allowed to equilibrate, as appropriate, prior to retrieval. After the equilibration time, the HydraSleeve™ may be collected again.

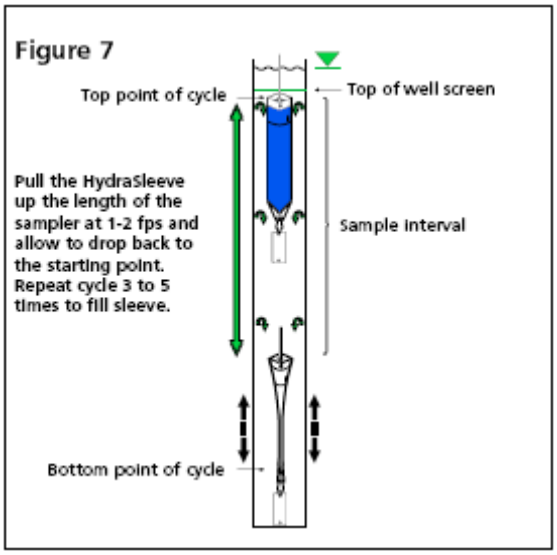

4. Collect sample parameters in the following order: VOCs (care should be taken to avoid agitation and volatilization of sample during the decanting process), explosives, metals, and other parameters. Samples will be collected and labeled in accordance with SOPs. Types of sample bottles and volume requirements for each analysis are provided in the Quality Assurance Project Plan (QAPP) and site-specific workplan. Metals samples will not be field filtered unless otherwise specified. If field filtering is required for any analyte, sample groundwater to be filtered will be decanted into an unpreserved bottle and filtered using a small hand pump as shown below in Photo 7.

5. The 36-inch long HydraSleeve™ has a capacity of 1 liter, and the largest (60-inch long) HydraSleeve™ SS for a 2-inch diameter well has a capacity of 2 liters. All groundwater samples, including QA/QC samples for a given well will be collected with one HydraSleeve™. If the volume requirement for sample analysis exceeds the capacity of the HydraSleeve™, it is not acceptable to redeploy the same or a second HydraSleeve to fill additional bottles. Rather, sampling of the well must be completely repeated. A larger size HydraSleeve™ must be deployed for the appropriate duration of time, or another approved sampling method (e.g., low-flow) must be used. Complete sample documentation on the Groundwater Sample Log.

6. Inspect the sampling bottles (obtained from the analytical laboratory prior to the sampling event) to be used to ensure that they are appropriate for the samples being collected, are undamaged, and have had the appropriate types and volumes of preservatives added. The types of sample containers to be used and sample preservation requirements will be provided in the site-specific workplan.

Photo 7

7. To remove a sample from the HydraSleeve™ with the least amount of aeration and agitation use the short plastic discharge tube (included). First, squeeze the full sampler just below the top to expel water resting above the flexible check valve (Photo 8).

Photo 8

8. Then, push the pointed discharge tube through the outer polyethylene sleeve about 3-4 inches below the white reinforcing strips (Photo 9).

Photo 9

9. Discharge the sample into the desired container in the order described in step 4 (Photo 10). Raising and lowering the bottom of the sampler or pinching the sample sleeve just below the discharge tube will control the flow of the sample. The sample sleeve can also be squeezed, forcing fluid up through the discharge tube, similar to squeezing a tube of toothpaste.

Photo 10

10. To obtain a duplicate/blind duplicate sample, collect a duplicate from the same bag as an original sample and send for analysis with the appropriate labeling.

11. To obtain an equipment blank, pour deionized water into a HydraSleeve and collect the blank using the same method as the samples and send for analysis with the appropriate labeling.

12. Place collected samples immediately in a sample cooler that is already full of ice or ice packs such that the samples are immediately chilled and stored at a temperature of 4 degrees Celsius, in accordance with SOPs.

13. Record depth to groundwater and total well depth.

14. Field parameters will be collected mid-screen from wells specified in the site-specific workplan. Calibrate all field analytical test equipment (e.g., pH, temperature, conductivity, ORP, turbidity, and DO) according to the instrument manufacturer's specifications and SOPs. Daily calibration results will be recorded on the appropriate form(s) as specified by the FSP and site-specific workplans. Instruments that cannot be calibrated according to the manufacturer's specifications will be removed from service and tagged.

15. Field parameter measurements (temperature, specific conductance, pH, DO, and ORP) will be taken after the HydraSleeve™ is removed from the well and the groundwater samples collected. This would occur through the use of a down-hole multi-meter (e.g., a YSI 600XL). Gently lower the probe of the meter down the well until it reaches the middle of the screen (screen intervals are found on the HydraSleeve™ Field Form). Follow the manufacturer’s guidelines on how to determine

stability of parameter readings. Once the meter readings have stabilized, record them on the HydraSleeve™ Field Form. Turbidity will be measured from groundwater taken directly from the HydraSleeve™, after analytical samples have been dispensed.

16. After the groundwater samples and field measurements have been collected, it may be necessary to deploy another HydraSleeve™ in the well for future sampling events (e.g., quarterly, semi-annually, etc.). The site-specific workplan will state if another HydraSleeve™ is to be deployed. The same suspension line will be reused for additional deployment to ensure consistency in the deployment depth. Follow the steps outlined previously in this SOP for deployment instructions.

17. Secure the well.

18. Properly dispose of PPE and disposable equipment.

19. Decontaminate any cutting devices, reusable weights, suspension lines, or sampler attachment mechanisms after each usage in accordance with SOPs.

VII. Waste Management

Any unused water from the PDB sampler and water used to decontaminate cutting devices should be disposed following SOPs and in accordance with local, State, and Federal regulations.

VIII. Data Recording and Management

All data will be recorded on HydraSleeve™ field forms and groundwater sampling field forms. Daily field logs will be maintained. Records generated as a result of this SOP will be controlled and maintained in the project record files in accordance with project requirements.

IX. Quality Assurance

Quality assurance procedures shall be conducted in accordance with the site-specific QAPP.

X. References

Cordry, K.E., 2006. HydraSleeve™ Field Manual. Las Cruces, N.M.: GeoInsight, Inc. http://www.hydrasleeve.com/images/stories/support/HydraSleeve_No-Purge_manual_updated.pdf

GeoInsight, Inc. 2010a. Standard Operating Procedure: Sampling Groundwater With a HydraSleeve™. Las Cruces, N.M.: GeoInsight, Inc. http://www.hydrasleeve.com/images/stories/support/HydraSleeve_SOP.pdf

GeoInsight, Inc. 2010b. SuperSleeve Assembly Instructions. Las Cruces, N.M. http://www.hydrasleeve.com/images/stories/support/SSfield_manual.pdf

Interstate Technology and Regulatory Council. 2004. Technical and Regulatory Guidance for Using Polyethylene Diffusion Bag Samplers to Monitor Volatile Organic Compounds in Groundwater. February.

XI. Attachments

A. HydraSleeve™ Field Form

B. Calculation Of Maximum Required Equilibration Period (Flush-Out Time) Based On Well Geometry And Darcy Velocity

ARCADIS

HydraSleeve™ Field Form

Site: _____

Location: _____

Well ID: _____

Well Type: ☐Monitoring ☐Other: _____

Well Finish: ☐Stick Up ☐Flush Mount

Measuring Pt: ☐Top of Casing ☐Other (specify):_____

Total Depth As Constructed (ft bgs):_____ **Screened Interval (ft bgs):**_____

Well Casing: Diameter: _____ Material: _____

Well Screen: Diameter: _____

Deployment

Date and Time of Deployment: Date: _____ Time: _____

Weather Conditions: _____

Depth to groundwater at time of deployment: _____

Total well depth at time of deployment: _____

Dimensions of HydraSleeve™: Length (in.) _____ Diameter (in.) _____

Deployment Method/Position of Weight:

☐Bottom Anchor: Weight attached to bottom of HydraSleeve™. Weight rests on well bottom.

☐Top-Down: Weight attached to bottom of HydraSleeve™. Weight suspended in well.

☐Top-Down: Weight attached to top of HydraSleeve™. Weight suspended in well.

Deployment Depth (Top of HydraSleeve™) (ft bgs): _____

Retrieval

Date and Time of Retrieval: Date: _____ Time: _____

Total # of days deployed: _____

Weather Conditions: _____

Retrieval Method:

☐ Continuous Pull (preferred)

☐ Short Strokes

Depth to groundwater at time of retrieval (measured before retrieval): _____

Total well depth at time of retrieval (measured after retrieval): _____

Downhole Field Parameters Upon Retrieval:

Temp:_____ **(^{o}C)** **ORP:**_____ **(mV)** **Water quality meter:**_____

pH:_____ **DO:**_____ **(mg/L)** **Serial #:**_____

Turbidity of Groundwater Sample (dispensed from HydraSleeve™):

Turbidity:_____ **(NTU)** **Turbidity meter:**_____ **Serial #:**_____

Notes/Observations:

Field Sampling Technician: Name(s) and Company

Name Company

_____

_____

ATTACHMENT B

CALCULATION OF MAXIMUM REQUIRED EQUILIBRATION PERIOD (FLUSH-OUT TIME) BASED ON WELL GEOMETRY AND DARCY VELOCITY

Example Calculations

Well Diam (inches)	Darcy v (ft/day)	Flush %	Flush Time (hours)
2	0.001	90	458
2	0.01	90	46
2	0.1	90	4.6
2	1	90	0.46
2	10	90	0.05
2	0.001	95	600
2	0.01	95	60
2	0.1	95	6.0
2	1	95	0.60
2	10	95	0.06
4	0.001	90	917
4	0.01	90	92
4	0.1	90	9.2
4	1	90	0.92
4	10	90	0.10
4	0.001	95	1200
4	0.01	95	120
4	0.1	95	12.0
4	1	95	1.20
4	10	95	0.12

General Equation for Flushing Time

t = [0.25 wd / (vd cf)] [-ln (1-f)]

where:
t = maximum required flushing time (hours)
wd = well diameter (inches)
vd = Darcy velocity, Ki (feet per day)
K = hydraulic conductivity (feet per day)
i = hydraulic gradient (dimensionless)
cf = flow convergence factor (typically between 2 and 3)
example calcs. assume cf = 2.5
f = % flush expressed as fraction
(e.g., 95% = 0.95, 90% = 0.90, etc.)

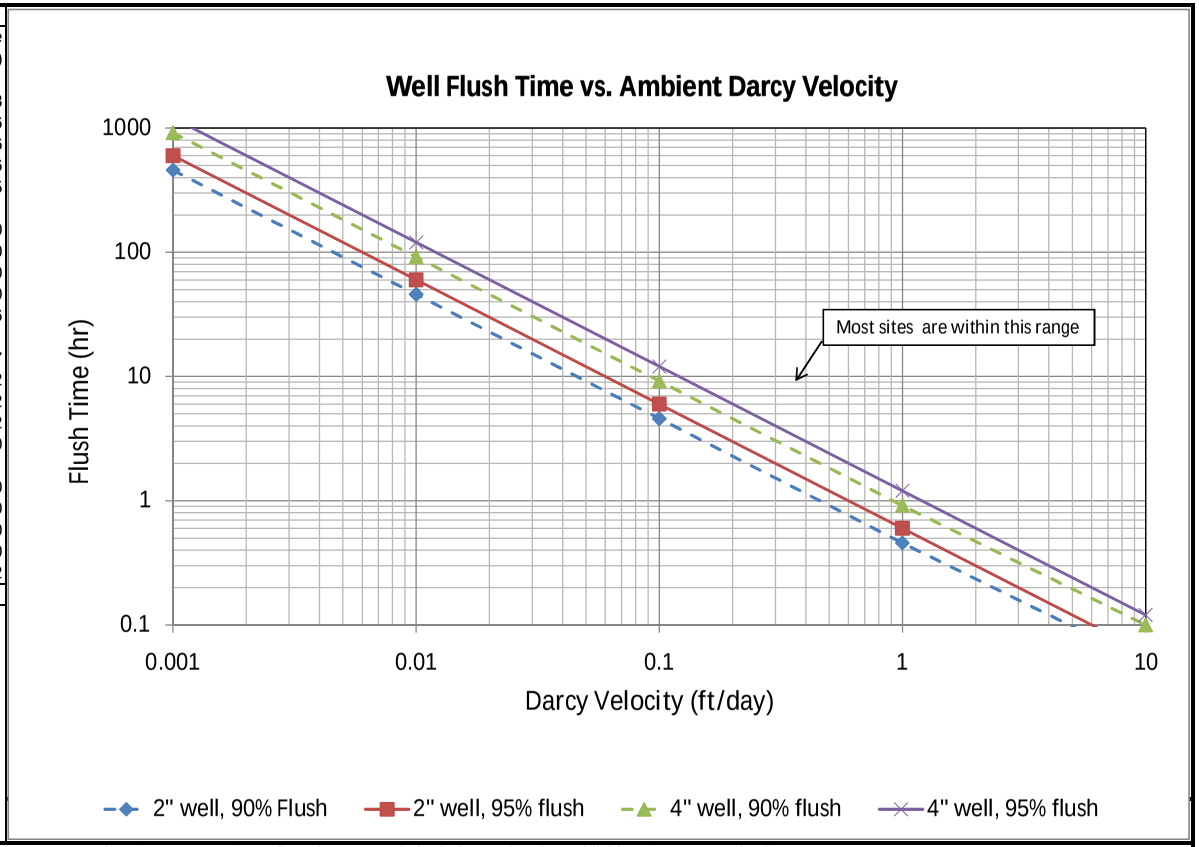

(Based on: Gaspar, E., and M. Onescu. 1972. Radioactive tracers in hydrology. Elsevier Publishing Co., Amsterdam)

F-19

Photoionization Detector Air Monitoring and Field Screening

ARCADIS
Infrastructure, environment, facilities

Imagine the result

Photoionization Detector Air Monitoring and Field Screening

Rev. #: 1

Rev Date: November 8, 2009

I. Scope and Application

Field screening with a photoionization detector (PID), such as an HNu™, Photovac™, MicroTIP™, or MiniRAE™, is a procedure to measure relative concentrations of volatile organic compounds (VOCs) and other compounds. Characteristics of the PID are presented in Attachment 1 and the compounds a PID can detect are presented in Attachment 2. Field screening will frequently be conducted on the following:

- Work area air to assess exposure to on-site workers of air contaminants via the air pathway;
- Well headspaces as a precautionary measure each time the well cover is opened; and
- Headspace of soil samples to assess the relative concentration of volatile organics in the sample or to select particular intervals for off-site analysis for VOCs.

II. Personnel Qualifications

Personnel performing this method should be familiar with the basic principles of quantiative analytical chemistry (such as calibration) and familiar with the particular operation of the instrument to be used.

III. Equipment List

The following materials, as required, shall be available while performing PID field screening:

- personal protective equipment (PPE), as required by the site Health and Safety Plan (HASP);
- PID and operating manual;
- PID extra battery pack and battery charger;
- calibration canisters for the PID;
- sample jars;
- Q-tips;

- aluminum foil;
- field calibration log (attached); and
- field notebook.

IV. Cautions

PIDs are sensitive to moisture and may not function under high humidity. PIDs cannot be used to indicate oxygen deficiency or combustible gases.

V. Health and Safety Considerations

Since the PIDs cannot detect all of the chemicals that may be present at a sample location, a zero reading on either instrument does not necessarily signify the absence of air contaminants. PIDs cannot be used as an indicator for oxygen deficiency.

VI. Procedure (*Note these procedures were written particular to one specific instrument model, therefore please also refer to your owners manual.Hhowever the general principles – such as always measuring both a zero and span gas after an instrument adjustment/at the beginning of the analytical day, after four hours of testing and again at the end of an analytical day can be applied to all instruments.)*

PID Calibration

PID field instruments will be calibrated and operated to yield “total organic vapor” in parts per million (ppm) (v/v) relative to benzene or isobutylene (or equivalent). Operation, maintenance, and calibration shall be performed in accordance with the manufacturer’s instructions and entered on the PID calibration and maintenance log (Attachment 3).

1. Don PPE, as required by the HASP.

2. Perform a BATTERY CHECK. Turn the FUNCTION switch to the BATTERY CHECK position. Check that the indicator is within or beyond the green battery arc. If battery is low, the battery must be charged before calibration.

3. Allow the instrument to warm up, then calibrate the PID. If equipped, turn the FUNCTION switch to the STANDBY position and rotate the ZERO

POTENTIOMETER until the meter reads zero with the instrument sampling clean air. Wait 15 to 20 seconds to confirm the adjustment. If unstable, readjust. If equipped, check to see that the SPAN POTENTIOMETER is adjusted for the probe being used (e.g., 9.8 for 10.2 electron volts [eV]). Set the FUNCTION switch to the desired ppm range (0-20, 0-200, or 0-2,000). A violet glow from the ultraviolet (UV) source should be visible at the sample inlet of the probe/sensor unit.

4. Listen for the fan operation to verify fan function.

5. Connect one end of the sampling hose to the calibration canister regulator outlet and the other end to the sampling probe of the PID. Crack the regulator valve and take a reading after 5 to 10 seconds. Adjust the span potentiometer to produce the concentration listed on the span gas cylinder. Record appropriate information on a PID Calibration and Maintenance Log (Attachment 3, or equivalent).

6. If so equipped, set the alarm at desired level.

7. Recheck the zero with fresh/clean air

8. Always recheck both zero and span after making any instrment adjustment, after four hours of screenign work and again after sample analysis.

Work Area Air Monitoring

1. Measure and record the background PID reading.

2. Measure and record the breathing space reading.

Well Headspace Screening

1. Measure and record the background PID reading.

2. Unlock and open the well cover while standing upwind of the well.

3. Remove the well cap.

4. Place the PID probe approximately 6 inches above the top of the casing.

5. Record all PID readings and proceed in accordance with the HASP.

Field Screening Procedures

Soil samples will be field screened upon collection with the PID for a relative measure of the total volatile organic concentration. The following steps define the PID field screening procedures.

1. Half-fill two clean glass jars with the sample (if sufficient quantities of soil are available) to be analyzed. Quickly cover each open top with one or two sheets of clean aluminum foil and subsequently apply screw caps to tightly seal the jars. Sixteen-ounce (approximately 500 mL) soil or "mason" type jars are preferred; jars less than 8 ounces (approximately 250 mL) total capacity may not be used.

2. Allow headspace development for at least 10 minutes. Vigorously shake jars for 15 seconds at both the beginning and end of the headspace development period. Where ambient temperatures are below 32°F (0°C), headspace development should be within a heated building.

3. Subsequent to headspace development, remove screw lid to expose the foil seal. Quickly puncture foil seal with instrument sampling probe, to a point about one-half of the headspace depth. Exercise care to avoid contact with water droplets or soil particulates.

4. Following probe insertion through foil seal, record the highest meter response for each sample as the jar headspace concentration. Using the foil seal/probe insertion method, maximum response should occur between 2 and 5 seconds. Erratic meter response may occur at high organic vapor concentrations or conditions of elevated headspace moisture, in which case headspace data should be recorded and erratic meter response noted.

5. The headspace screening data from both jar samples should be recorded and compared; generally, replicate values should be consistent to plus or minus 20%. It should be noted that in some cases (e.g., 6-inch increment soil borings), sufficient sample quantities may not be available to perform duplicate screenings. One screening will be considered sufficient for this case.

6. PID field instruments will be operated and calibrated to yield "total organic vapors" in ppm (v/v) as benzene. PID instruments must be operated with at least a 10.0 eV (+) lamp source. Operation, maintenance, and calibration will be performed in accordance with the manufacturer's specifications presented in Attachment 12-1. For jar headspace analysis, instrument calibration will be checked/adjusted at least twice per day, at the beginning and end of each day

of use. Calibration will exceed twice per day if conditions and/or manufacturer's specifications dictate.

7. Instrumentation with digital (LED/LCD) displays may not be able to discern maximum headspace response unless equipped with a "maximum hold" feature or strip-chart recorder.

VII. Waste Management

Do not dispose canisters of compressed gas, if there is still compressed gas in the canister. Return the canister to the manufactuer for proper disposal.

VIII. Data Recording and Management

Measurements will be record in the field notebook or boring logs at the time of measurement with notation of date, time, location, depth (if applicable), and item monitored. If a data memory is available, readings will be downloaded from the unit upon access to a computer with software to retrieve the data.

IX. Quality Assurance

After each use, the readout unit should be wiped down with a clean cloth or paper towel.

For a HNu, the UV light source window and ionization chamber should be cleaned once a month in the following manner:

1. With the PID off, disconnect the sensor/probe from the unit.

2. Remove the exhaust screw, grasp the end cap in one hand and the probe shell in the other, and pull apart.

3. Loosen the screws on top of the end cap and separate the end cap and ion chamber from the lamp and lamp housing.

4. Tilt the lamp housing with one hand over the opening so that the lamp slides out into your hand.

5. Clean the lamp with lens paper and HNu cleaning compound (except 11.7 eV). For the 11.7 eV lamp, use a chlorinated organic solvent.

6. Clean the ion chamber using methanol on a Q-tip and then dry gently at 50ºC to 60ºC for 30 minutes.

7. Following cleaning, reassemble by first sliding the lamp back into the lamp housing. Place ion chamber on top of the housing, making sure the contacts are properly aligned.

8. Place the end cap on top of the ion chamber and replace the two screws (tighten the screws only enough to seal the o-ring).

9. Line up the pins on the base of the lamp housing with pins inside the probe shell and slide the housing assembly into the shell.

X. References

Denahan, S.A. et. all "Relationships Between Chemical Screening Methodologies for Petroleum Contaminated Soils: Theory and Pracice" *Chapter 5 In Principles and Practices for Petroleum Contaminated Soils,* E.J. Calabrese and P.T. Kostecki Eds., Lewis Publishers 1993.

Fitzgerald, J. "Onsite Analytical Screening of Gasoline Contaminated Media Using a Jar Headspace Procedure" Chapter 4 *in Principles and Practices for Petroleum Contaminated Soils,* E.J. Calabrese and P.T. Kostecki Eds., Lewis Publishers 1993.

ATTACHMENT 1

Characteristics of the Photoionization Detector (PID)

I. Introduction

PIDs are used in the field to detect a variety of compounds in air. PIDs can be used to detect leaks of volatile substances in drums and tanks, to determine the presence of volatile compounds in soil and water, and to make ambient air surveys. If personnel are thoroughly trained to operate the instrument and interpret the data, these PID instruments can be a valuable tool. Its use can help in deciding the level of protection to be worn, assist in determining the implementation of other safety procedures, and in determining subsequent monitoring or sampling locations.

Portable PIDs detect the concentration of organic gases, as well as a few inorganic gases. The basis for detection is the ionization of gaseous species. The incoming gas molecules are subjected to UV radiation, which ionizes molecules that have an ionization potential (IP) less than or equal to that rated for the UV source. Every molecule has a characteristic IP, which is the energy required to remove an electron from the molecule, thus yielding a positively charged ion and the free electron. These ions are attracted to an oppositely charged electrode, causing a current and an electric signal to the LED display. Compounds are measured on a ppm volume basis.

II. HNu PI-101 / MiniRAE or Equivalent PID

The PIDs detect the concentration of organic gases, as well as a few inorganic gases. The basis for detection is the ionization of gaseous species. The incoming gas molecules are subjected to UV radiation, which is energetic enough to ionize many gaseous compounds. Each molecule is transformed into charged ion pairs, creating a current between two electrodes. Every molecule has a characteristic IP, which is the energy required to remove an electron from the molecule, yielding a positively charged ion and the free electron.

Three probes, each containing a different UV light source, are available for use with the PID. Probe energies are typically 9.5, 10.2, and 11.7 eV, respectively. All three probes detect many aromatic and large-molecule hydrocarbons. In addition, the 10.2 eV and 11.7 eV probes detect some smaller organic molecules and some halogenated hydrocarbons. The 10.2 eV probe is the most useful for environmental response work, as it is more durable than the 11.7 eV probe and detects more compounds than the 9.5 eV probe. A listing of molecules and compounds that the HNu can detect is presented in Attachment 2.

The primary PID calibration gas is either benzene or isobutylene. The span potentiometer knob is turned to 9.8 for benzene calibration. A knob setting of zero increases the sensitivity to benzene approximately 10-fold. Its lower detection limit is in the low ppm range. Additionally, response time is rapid; the dot matrix liquid crystal displays 90% of the indicated concentration within 3 seconds.

III. Limitations

The PID instrument can monitor several vapors and gases in air. Many non-volatile liquids, toxic solids, particulates, and other toxic gases and vapors, however, cannot be detected with PIDs (such as methane). Since the PIDs cannot detect all of the chemicals that may be present at a sample location, a zero reading on either instrument does not necessarily signify the absence of air contaminants.

The PID instrument is generally not specific and their response to different compounds is relative to the calibration gases. Instrument readings may be higher or lower than the true concentration. This effect can be observed when monitoring total contaminant concentrations if several different compounds are being detected at once. In addition, the response of these instruments is not linear over the entire detection range. Therefore, care must be taken when interpreting the data. Concentrations should be reported in terms of the calibration gas and probe type.

PIDs are small, portable instruments and may not yield results as accurate as laboratory instruments. PIDs were originally designed for specific industrial applications. They are relatively easy to use and interpret when detecting total concentrations of known contaminants in air, but interpretation becomes more difficult when trying to identify the individual components of a mixture. PIDs cannot be used as an indicator for combustible gases or oxygen deficiency.

ATTACHMENT 2

Molecules and Compounds Detected by a PID

Some Atoms and Simple Molecules

	IP(eV)		IP(eV)
H	13.595	I_2	9.28
C	11.264	HF	15.77
N	14.54	HCl	12.74
O	13.614	HBr	11.62
Si	8.149	HI	10.38
S	10.357	SO_2	12.34
F	17.42	CO_2	13.79
Cl	13.01	COS	11.18
Br	11.84	CS_2	10.08
I	10.48	N_2O	12.90
H_2	15.426	NO_2	9.78
N_2	15.580	O_3	12.80
O_2	12.075	H_2O	12.59
CO	14.01	H_2S	10.46
CN	15.13	H_2Se	9.88
NO	9.25	H_2Te	9.14
CH	11.1	HCN	3.91
OH	13.18	C_2N_2	13.8
F_2	15.7	NH_3	10.15
Cl_2	11.48	CH_3	9.840
Br_2	10.55	CH_4	12.98

Paraffins and Cycloparaffins

Molecule	IP(eV)
methane	12.98
ethane	11.65
propane	11.07
n-butane	10.63
i-butane	10.57
n-pentane	10.35
i-pentane	10.32
2,2-dimethylpropane	10.35
n-hexane	10.18
2-methlypentane	10.12
3-methlypentane	10.08
2,2-dimethlybutane	10.06
2,3-dimethlybutane	10.02
n-heptane	10.08
2,2,4-trimethlypentane	9.86
cyclopropane	10.06
cyclopentane	10.53
cyclohexane	9.88
methlycyclohexane	9.8

Alkyl Halides

IP(eV)	IP(eV)
HCl	12.74
Cl_2	11.48
CH_4	12.98
methyl chloride	11.28
dichloroemethane	11.35
trichloromethane	11.42
tetrachloromethane	11.47
ethyl chloride	10.98
1,2-dichloroethane	11.12
1-chloropropane	10.82
2-chloropropane	10.78
1,2-dichloropropane	10.87
1,3-dichloropropane	10.85
1-chlorobutane	10.67
2-chlorobutane	10.65
1-chloro-2-methylpropane	10.66
2-chloro-2-methylpropane	10.61
HBr	11.62
Br_2	10.55
methyl bromide	10.53
dibromomethane	10.49
tribromomethane	10.51
CH_2BrCl	10.77
$CHBr_2Cl$	10.59
ethyl bromide	10.29
1,1-dibromoethane	10.19
1-bromo-2-chloroethane	10.63
1-bromopropane	10.18
2-bromopropane	10.075
1,3-dibromopropane	10.07
1-bromobutane	10.13
2-bromobutane	9.98
1-bromo-2-methylpropane	10.09
2-bromo-2-methylpropane	9.89
1-bromopentane	10.10
HI	10.38
I_2	9.28

Alkyl Halides

Molecule	IP(eV)
methyl iodide	9.54
diiodomethane	9.34
ethyl iodide	9.33
1-iodopropane	9.26
2-iodopropane	9.17
1-iodobutane	9.21
2-iodobutane	9.09
1-iodo-2-methylpropane	9.18
2-iodo-2-methylpropane	9.02
1-iodopentane	9.19
F_2	15.7
HF	15.77
$CFCl_3$ (Freon 11)	11.77
CF_2Cl_2 (Freon 12)	12.31
CF_3Cl (Freon 13)	12.91
$CHClF_2$ (Freon 22)	12.45
$CFBR_3$	10.67
CF_2Br_2	11.07
CH_3CF_2Cl (Genetron 101)	11.98
$CFCl_2CF_2Cl$	11.99
CF_3CCl_3 (Freon 113)	11.78
$CFHBrCH_2Cr$	10.75
CF_2BrCH_2Br	10.83
CF_3CH_2I	10.00
n-C_3F_7I	10.36
n-$C_3F_7CH_2Cl$	11.84
n-$C_3F_7CH_2I$	9.96

Aliphatic Alcohol, Ether, Thiol, and Sulfides

Molecule	IP(eV)
H_2O	12.59
methyl alcohol	10.85
ethyl alcohol	10.48
n-propyl alcohol	10.20
i-propyl alcohol	10.16
n-butyl alcohol	10.04
dimethyl ether	10.00
diethyl ether	9.53
n-propyl ether	9.27
i-propyl ether	9.20
H_2S	10.46
methanethiol	9.440
ethanethiol	9.285
1-propanethiol	9.195
1-butanethiol	9.14
dimethyl sulfide	8.685
ethyl methyl sulfide	8.55
diethyl sulfide	8.430
di-n-propyl sulfide	8.30

Aliphatic Aldehydes and Ketones

Molecule	IP(eV)
CO_2	13.79
formaldehyde	10.87
acetaldehyde	10.21
propionaldehyde	9.98
n-butyraldehyde	9.86
isobutyraldehyde	9.74
n-valeraldehyde	9.82
isovaleraldehyde	9.71
acrolein	10.10
crotonaldehyde	9.73
benzaldehyde	9.53
acetone	9.69
methyl ethyl ketone	9.53
methyl n-propyl ketone	9.39
methyl i-propyl ketone	9.32
diethyl ketone	9.32
methyl n-butyl ketone	9.34
methyl i-butyl ketone	9.30
3,3-dimethyl butanone	9.17
2-heptanone	9.33
cyclopentanone	9.26
cyclohexanone	9.14
2,3-butanedione	9.23
2,4-pentanedione	8.87

Aliphatic Acids and Esters

Molecule	IP(eV)
CO_2	13.79
formic acid	11.05
acetic acid	10.37
propionic acid	10.24
n-butyric acid	10.16
isobutyric acid	10.02
n-valeric acid	10.12
methyl formate	10.815
ethyl formate	10.61
n-propyl formate	10.54
n-butyl formate	10.50
isobutyl formate	10.46
methyl acetate	10.27
ethyl acetate	10.11
n-propyl acetate	10.04
isopropyl acetate	9.99
n-butyl acetate	10.01
isobutyl acetate	9.97
sec-butyl acetate	9.91
methyl propionate	10.15
ethyl propionate	10.00
methyl n-butyrate	10.07
methyl isobutyrate	9.98

Aliphatic Amines and Amides

Molecule	IP(eV)
NH_3	10.15
methyl amine	8.97
ethyl amine	8.86
n-propyl amine	8.78
i-propyl amine	8.72
n-butyl amine	8.71
i-butyl amine	8.70
s-butyl amine	8.70
t-butyl amine	8.64
dimethyl amine	8.24
diethyl amine	8.01
di-n-propyl amine	7.84
di-i-propyl amine	7.73
di-n-butyl amine	7.69
trimethyl amine	7.82
triethyl amine	7.50
tri-n-propyl amine	7.23
formamide	10.25
acetamide	9.77
N-methyl acetamide	8.90
N,N-dimethyl formamide	9.12
N,N-dimethyl acetamide	8.81
N,N-diethyl formamide	8.89
N,N-diethyl acetamide	8.60

Other Aliphatic Molecules with N Atom

Molecule	IP(eV)
nitromethane	11.08
nitroethane	10.88
1-nitropropane	10.81
2-nitropropane	10.71
HCN	13.91
acetonitrile	12.22
propionitrile	11.84
n-butyronitrile	11.67
acrylonitrile	10.91
3-butene-nitrile	10.39
ethyl nitrate	11.22
n-propyl nitrate	
methyl thiocyanate	10.065
ethyl thiocyanate	9.89
methyl isothiocyanate	9.25
ethyl isothiocyanate	9.14

Olefins, Cyclo-ofefins, Acetylenes

Molecule	IP(eV)
ethylene	10.515
propylene	9.73
1-butene	9.58
2-methylpropene	9.23
trans-2-butene	9.13
cis-2-butene	9.13
1-pentene	9.50
2-methyl-1-butene	9.12
3-methyl-1-butene	9.51
3-methyl-2-butene	8.67
1-hexene	9.46
1,3-butadiene	9.07
isoprene	8.845
cyclopentene	9.01
cyclohexene	8.945
4-methylcyclohexene	8.91
4-cinylcylohexene	8.93
cyclo-octatetraene	7.99
acetylene	11.41
propyne	10.36
1-butyne	10.18

Some Derivatives of Olefins

Molecule	IP(eV)
vinyl chloride	9.995
cis-dichloroethylene	9.65
trans-dichloroethylene	9.66
trichloroethylene	9.45
tetrachloroethylene	9.32
vinyl bromide	9.80
1,2-dibromoethylene	9.45
tribromoethylene	9.27
3-chloropropene	10.04
2,3-dichloropropene	9.82
1-bromopropene	9.30
3-bromopropene	9.7
$CF_3CCl{=}CClCF_3$	10.36
$n\text{-}C_5F_{11}CF{=}CF_2$	10.48
acrolein	10.10
crotonaldehyde	9.73
mesityl oxide	9.08
vinyl methyl ether	8.93
allyl alcohol	9.67
vinyl acetate	9.19

Aromatic Compounds

Molecule	IP(eV)
benzene	9.245
toluene	8.82
ethyl benzene	8.76
n-propyl benzene	8.72
i-propyl benzene	8.69
n-butyl benzene	8.69
s-butyl benzene	8.68
t-butyl benzene	8.68
o-xylene	8.56
m-xylene	8.56
p-xylene	8.445
mesitylene	8.40
durene	8.025
styrene	8.47
alpha-methyl styrene	8.35
ethynylbenzene	8.815
naphthalene	8.12
1-methylnapthalene	7.69
2-methylnapthalene	7.955
biphenyl	8.27
phenol	8.50
anisole	8.22
phenetole	8.13
benzaldehyde	9.53
acetophenone	9.27
benzenethiol	8.33
phenyl isocyanate	8.77

Aromatic Compounds

Molecule	IP(eV)
phenyl isothiocyanate	8.520
benzonitrile	9.705
nitrobenzene	9.92
aniline	7.70
fluoro-benzene	9.195
chloro-benzene	9.07
bromo-benzene	8.98
iodo-benzene	8.73
o-dichlorobenzene	9.07
m-dichlorobenzene	9.12
p-dichlorobenzene	8.94
1-chloro-2-fluorobenzene	9.155
1-chloro-3-fluorobenzene	9.21
1-chloro-4-fluorobenzene	8.99
o-fluorotoluene	8.915
m-fluorotoluene	8.915
p-fluorotoluene	8.785
o-chlorotoluene	8.83
m-chlorotoluene	8.83
p-chlorotoluene	8.70
o-bromotoluene	8.79
m-bromotoluene	8.81
p-bromotoluene	8.67
o-iodotoluene	8.62
m-iodotoluene	8.61
p-iodotoluene	8.50
benzotrifluoride	9.68
o-fluorophenol	8.66

Heterocyclic Molecules

Molecule	IP(eV)
furan	8.89
2-methyl furan	8.39
2-furaldehyde	9.21
tetrahydrofuran	9.54
dihydropyran	8.34
tetrahydropyran	9.26
thiophene	8.860
2-chlorothiophene	8.68
2-bromothiophene	8.63
pyrrole	8.20
pyridine	9.32
2-picoline	9.02
3-picoline	9.04
4-picoline	9.04
2,3-lutidine	8.85
2,4-lutidine	8.85
2,6-lutidine	8.85

Miscellaneous Molecules

Molecule	IP(eV)
ethylene oxide	10.565
propylene oxide	10.22
p-dioxane	9.13
dimethoxymethane	10.00
diethoxymethane	9.70
1,1-dimethoxyethane	9.65
propiolactone	9.70
methyl disulfide	8.46
ethyl disulfide	8.27
diethyl sulfite	9.68
thiolacetic acid	10.00
acetyl chloride	11.02
acetyl bromide	10.55
cyclo-$C_6H_{11}CF_3$	10.46
(n-C_3F_7)(CH_3)C=O	10.58
trichlorovinylsilane	10.79
$(C_2F_5)_3N$	11.7
isoprene	9.08
phosgene	11.77

Notes:

Reference: HNu Systems, Inc., 1985
IP = Ionization Potential

ATTACHMENT 3

PID CALIBRATION AND MAINTENANCE LOG

Instrument Model Number

Instrument Serial Number

Calibration Gas **ppm**

Date/Time	Initials	Battery Check	Calibration			
			Background Value	True Gas Value	Measured Gas Value	Adjust

COMMENTS:

F-20

Flame Ionization Detector Air Monitoring and Field Screening

ARCADIS
Infrastructure, environment, facilities

Imagine the result

Flame Ionization Detector Air Monitoring and Field Screening

Rev. #: 0

Rev Date: July 25, 2003

I. Scope and Application

Field screening with a flame ionization detector (FID), such as an organic vaporizer analyzer (OVA), is a procedure to measure relative concentrations of volatile organic compounds (VOCs) and other compounds in air. The characteristics of the OVA are presented in Attachment 1; the compounds which it can detect are presented in Attachment 2; indicators of malfunction are summarized in Attachment 3; and the OVA Calibration and Maintenance Log is included in Attachment 4.

Field screening will be conducted on the following:

- Work area air to assess exposure to on-site workers of air contaminants via the air pathway;
- Well headspaces as a precautionary measure each time the well cover is opened; and
- Soil samples obtained with split-barrel sampler.

II. Personnel Qualifications

To be completed by Preparer and reviewed by Technical Expert.

III. Equipment List

The following materials, as required, shall be available while performing OVA field screening:

- personal protective equipment (PPE), as required by the site Health and Safety Plan (HASP);
- OVA operating manual;
- calibration gas canisters; and
- field notebook.

IV. Cautions

To be completed by Preparer and reviewed by Technical Expert.

V. Health and Safety Considerations

To be completed by Preparer and reviewed by Technical Expert.

VI. Procedure

The OVA will be operated according to the procedures contained in the operating manual. A summary of basic start-up and shut-down procedures is provided below.

Start-Up

1. Move PUMP Switch to ON and check battery condition by moving the INSTR Switch to the BATT position.

2. Move INSTR Switch to ON and allow 5 minutes for warm up.

3. Set Alarm Level Adjust knob on back of Readout Assembly to desired level and adjust volume.

4. Check calibration with HIGH/LOW Calibrate Switch. End the check by going to HIGH position and then to OFF. Turn PUMP Switch ON.

5. Place instrument panel in vertical position and check sample flow rate indication.

6. Open the H2 TANK VALVE and the H2 SUPPLY VALVE.

7. Depress the igniter button until burner lights. Do not depress igniter button for more than 6 seconds (if burner does not ignite, let instrument run for several minutes and again attempt ignition).

8. The instrument is now ready for use.

Shut Down

1. Close the H2 SUPPLY VALVE and H2 TANK VALVE.

2. Move the INSTR Switch and PUMP Switch to OFF.

3. Instrument in now in shut down configuration.

OVA Calibration

OVA field instruments will be calibrated to methane and operated to yield measurements of "total organic vapor" in ppm (v/v). OVA operation, maintenance, and calibration shall be performed in accordance with the manufacturer's instructions and entered on the OVA Calibration and Maintenance Log (Attachment 4). Instructions for OVA calibration are summarized as follows:

Electronic Adjustments for Calibration Using Methane as the Standard

Calibrate the instrument as follows:

1. Prepare two known concentrations of methane gas in air, preferably 100 ppm and 10,000 ppm (1%).

2. Place the OVA in normal operation and permit it to warm up for at least 15 minutes.

3. Introduce the 100 ppm sample and rotate the Calibration Adjust knob for 100 ppm on the meter.

4. Introduce the 10,000 ppm mixture and adjust R-4 on the electronics board for 10,000 ppm.

5. Repeat Steps 3 and 4 until no further adjustment is necessary.

6. Close the Hydrogen Supply Valve and wait until the flame is extinguished.

7. Place the Calibrate Switch in the Low position and rotate the GAS Select knob until the meter reads 10 ppm.

8. Place the Calibrate Switch in the High position and adjust R-16 on the electronics board for 10,000 ppm.

9. Repeat Steps 7 and 8 until no further adjustment is necessary.

Work Area Air Monitoring

1. Measure and record the background OVA reading.

2. Measure and record breathing space reading.

3. Adjust level of PPE, as described in the HASP, and proceed.

4. Record OVA readings.

VII. Waste Management

To be completed by Preparer and reviewed by Technical Expert.

VIII. Data Recording and Management

To be completed by Preparer and reviewed by Technical Expert.

IX. Quality Assurance

To be completed by Preparer and reviewed by Technical Expert.

X. References

To be completed by Preparer and reviewed by Technical Expert.

ATTACHMENT 1

CHARACTERISTICS OF THE OVA

The organic vapor analyzer (OVA) is one type of flame ionization detector (FID). All FID instruments use ionization as the detection method, much the same as in the photoionization detector (PID), except that the ionization is caused by a hydrogen flame rather than by a UV light. This flame has sufficient energy to ionize any organic species with an ionization potential of 15.4 or less. Inside the detector chamber, the sample is exposed to a hydrogen flame which ionizes the organic vapors. When most organic vapors burn, positively charged carbon-containing ions are produced which are collected by a negatively charged collecting electrode in the chamber. An electric field exists between the conductors surrounding the flame and a collecting electrode. As the positive ions are collected, a current proportional to the hydrocarbon concentration is generated on the input electrode. This current is measured with a preamplifier which has an output signal proportional to the ionization current.

A signal conducting amplifier is used to amplify the signal from the pre-amp and to condition it for subsequent meter or external recorder display.

The Foxboro OVA consists of two major parts:

- A 9-pound package containing the sampling pump, battery pack, support electronics, FID, hydrogen gas cylinder, and an optional gas chromatography (GC) column; and

- A hand-held meter/sampling probe assembly.

The OVA is generally calibrated to methane, but can be calibrated to the species of interest.

The OVA can be operated in a GC mode or survey mode. During normal survey mode operation, a sample is drawn into the probe and transported to the detector chamber by an internal pumping system. When the sample reaches the FID, it is ionized as described above and the resulting signal is translated on the meter for direct-reading concentration as total organic vapors or recorded as a peak on the chart. The meter display is an integral part of the probe/read-out assembly and has a scale from 0 to 10 which can be set to read 0-10, 0-100, or 0-1,000 ppm.

With the GC option, individual components can be detected and measured independently. In the GC mode, a small sample of ambient air is injected into a chromatographic column and carried through the column by a stream of hydrogen gas. Two valves are used in the GC system: the sample inject valve and the backflush valve. The sample inject valve diverts a fixed volume of vapor contained in the sample loop into the hydrogen gas carrier and through the chromatographic column for separation identification, and quantification of individual components present. The backflush valve reverses the flow of the hydrogen flow through the GC column to clear the column of any contamination. In the GC mode, backflush plays a significant role in determining the presence of high boiling contaminants. If no peaks are observed after the desired run time, the user might assume no contaminants are present; however, high boiling volatiles may still be present. Backflushing allows for the detection of high boiling volatile components.

Compounds with different chemical structures are retained on the column for different lengths of time (known as retention times) and, hence, are detected separately by the FID. As each component exits the column into the detector, it is ionized and a proportional output voltage is recorded on a strip chart recorder. A strip chart recorder can be used to record the retention times, which are then compared to the retention times of a standard with known chemical constituents.

An instrument output meter serves to indicate, in ppm units, the concentration of total organic vapor. The concentration (in ppm) represents a summation of the percent relative response values characteristic of each individual organic compound in the sample. The sample can either be injected into the column from the air sampling hose or injected directly with a gas-tight syringe.

ATTACHMENT 2

RESPONSE FACTORS FOR THE OVA

CHEMICAL COMPOUND	RESPONSE FACTOR (%)
Acetonitrile	70
Acrylonitrile	70
Allyl Alcohol	30
Allyl Chloride	50
BenzenE	150
2-Bromo-2-chloro-1,1,1-trifluoroethane (Halothane)	45
Bromomethane	75
1-Bromopropane	75
2-Butane	60
n-Butanol	50
2-Butanol	65
n-Butyl Acetate	80
n-Butyl Acrylate	60
2-Butyl Acrylate	70
n-Butyl Formate	50
2-Butyl Formate	60
n-Butyl Methacrylate	60
2-Butyl Methacrylate	80
Carbon Tetrachloride	10
Chlorobenzene	200
Chlorodifluoromethane (Freon 22)	40
Chloroform	65
1-Chloropropane	76
2-Chloropropane	90
2-Chloro-1,1,2-trifluoroethyl difluoromethyl ether (Ethane)	150
Cumene	100
Cyclohexane	85
Cyclohexanone	100
n-Decane	75
O-Dichlorobenzene	50
Dichlorodifluoromethane (Freon 12)	15
1,1-Dichloroethane	80
1,2-Dichloroethane	80
trans-1,2-Dichloroethylene	50
Dichlorofluoromethane (Freon 21)	70
Dichloromethane	100
1,2-Dichloropropane	90
1,3-Dichloropropane	80
1,2-Dichloro 1,1,2,2-tetrafluoroethane (Freon 114)	110

CHEMICAL COMPOUND	RESPONSE FACTOR (%)
Diethyl Ether	50
Diethyl Ketone	80
p-Dioxane	30
Ethane	80
Ethanethiol	30
Ethanol	25
Ethyl Acetate	65
Ethyl Acrylate	40
Ethyl Benzene	100
Ethyl Butyrate	70
Ethyl Formate	40
Ethyl Methacrylate	70
Ethyl Propionate	65
Ethylene Dibromide	50
Ethylene Dichloride	60
Ethylene Oxide	70
Fluorotrichloromethane (Freon 11)	10
Heptane	75
Hexane	70
Isoprene	50
Methane	100
Methyl Alcohol	12
Methyl Acetate	41
Methyl Acrylate	40
Methyl Cyclohexane	100
Methyl Cyclopentane	80
Methyl Ethyl Ketone	80
Methyl Isobutyl Ketone	80
Methyl Methacrylate	50
Methyl Propyl Ketone	70
Nitromethane	35
1-Nitropropane	60
2-Nitropropane	70
Nonane	90
Octane	80
Pentane	65
Pentanol	40
Propane	80
n-Propanol	40
2-Propanol	65
n-Propyl Acetate	75
n-Propyl Ether	65
n-Propyl Formate	50

CHEMICAL COMPOUND	RESPONSE FACTOR (%)
Pyridine	128
Styrene	85
1,1,1,2-Tetrachloroethane	100
1,1,2,2-Tetrachloroethane	100
Tetrachloroethylene	70
Tetrahydrofuran	40
Toluene	110
1,1,1-Trichloroethane	105
1,1,2-Trichloroethane	85
Trichloroethylene	70
Trichlorofluoroethane (Freon 113)	80
Triethylamine	70
Vinyl Acetate	50
Vinyl Chloride	35
Vinylidene Chloride	40
m-Xylene	111
o-Xylene	116
p-Xylene	116

Note:

[1] Response factors for Foxboro Century OVA when instrument is calibrated to methane. For example, the instrument response factor for benzene is 150% and a 100 ppm concentration of benzene in air would register as 150 ppm on the instrument read-out.

ATTACHMENT 3

INDICATORS OF MALFUNCTION OF THE OVA

INDICATION	POSSIBLE CAUSES
• High Background Reading (more than 10 ppm)	1. Contaminated hydrogen 2. Contaminated sample line
• Continual Flameout	1. Hydrogen leak 2. Dirty burner chamber 3. Dirty air filters
• Low Air Flow	1. Dirty air filter 2. Pump malfunction 3. Line obstruction
• Flame Will Not Light	1. Low battery 2. Igniter broken 3. Hydrogen leak 4. Dirty burner chamber 5. Air flow restricted
• No Power to Pump	1. Low battery 2. Short circuit
• Hydrogen Leak (instrument not in use)	1. Leak in regulator 2. Leak in valves

ATTACHMENT 4

OVA CALIBRATION AND MAINTENANCE LOG

FID Calibration and Maintenance Log

Instrument Model Number	
Instrument Serial Number	
Calibration Gas (ppm)	

Date/Time	Initials	Fuel and Battery Check	Calibration			
			Background Value	True Gas Value	Measured Gas Value	Adjust

Comments:

F-21

Multiple Gas Air Monitoring and Field Screening

ARCADIS
Infrastructure, environment, facilities

Imagine the result

Multiple Gas Air Monitoring and Field Screening

Rev. #: 0

Rev Date: July 20, 2003

I. Scope and Application

Field screening with a one-to-five sensor instrument, such as a MultiRAE, is a procedure to measure relative concentrations of volatile organic compounds (VOCs), carbon monoxide, hydrogen sulfide, oxygen, and combustible gas, as well as other compounds. Characteristics of the MultiRAE are presented in Attachment 1. Field screening will be conducted on the following:

- Work area air to assess exposure to on-site workers of air contaminants via the air pathway;
- Well headspaces as a precautionary measure each time the well cover is opened; and
- Measuring ports of landfill gas monitoring locations.

II. Personnel Qualifications

User personnel should be familiar with monitor operation and read through the operation manual that is provided with the instrument in order to properly calibrate and operate the monitor.

III. Equipment List

The following materials, as required, shall be available while performing MultiRAE field screening:

- personal protective equipment (PPE), as required by the site Health and Safety Plan (HASP);
- MultiRAE Plus and operating manual;
- calibration canisters for the MultiRAE;
- sample jars;
- aluminum foil; and
- field notebook.

IV. Cautions

Alarm levels for the MultiRAE are as follows:

High - 3 beeps and flashes per second;

Low - 2 beeps and flashes per second; and

STEL and TWA - 1 beep and flash per second.

V. Health and Safety Considerations

Care should be taken when handling calibration gas cylinders as contents may be under pressure.

VI. Procedure

MultiRAE Calibration

MultiRAE field instruments contain an integrated photoionization detector (PID) which will be calibrated and operated to yield “total organic vapor” in parts per million (ppm) (v/v). Operation, maintenance, and calibration shall be performed in accordance with the manufacturer’s instructions and entered on the PID Calibration and Maintenance Log (Attachment 2).

1. Don PPE, as required by the HASP.

2. Hold the “Mode” key to turn on. Alarm will beep once. Warm-up will take approximately 90 seconds.

3. After the 90 second warm-up, the MultiRAE should display all of the installed sensors. If there is no alarm and the sensor readings are in the correct range, then the MultiRAE is ready for use. If the readings are outside the correct range, then perform a “Fresh air calibration.”

4. To calibrate the MultiRAE, hold the “Mode” and “N/-” keys for 5 seconds to get into the programming mode. Press “Y” or “N” at appropriate intervals and follow instructions on screen. When performing the “Fresh air calibration,” make sure that the air is clean.

5. To perform the “Multiple Sensor Calibration,” press “Y/+” at the appropriate screen. Attach the calibration gas regulator to the mixed gas cylinder and

attach calibration hose to MultiRAE. Turn on calibration gas. Follow instructions on screen. Disconnect regulator from gas cylinder when calibration is complete.

6. VOC can only be calibrated individually. At “Single Sensor Calibration,” press the “Y/+” key. Use “Mode” key to select VOC. Attach calibration gas regulator to VOC (isobutylene) cylinder. Attach calibration hose to MultiRAE and make sure it is tight. With cursor on VOC, press “Y/+” key. Turn on calibration gas. Follow instructions on screen. Repeat if necessary for other gases. Disconnect regulator.

7. Set the alarms at desired levels by pressing “Y/+” to accept default or “N/-” to move on. Press “Mode” to escape.

8. To power off, hold the “Mode” key for full 5 seconds. Leave MultiRAE on charger when not in use.

Work Area Air Monitoring Procedures

1. Measure and record the background PID and other gas readings.

2. Measure and record the breathing space readings.

Well Headspace Screening Procedures

1. Measure and record the background PID and other gas readings.

2. Unlock and open the well cover while standing upwind of the well.

3. Remove the well cap.

4. Place the MultiRAE probe approximately 6 inches above the top of the casing.

5. Record all MultiRAE readings and proceed in accordance with the HASP.

VII. Waste Management

To be completed by Preparer and reviewed by Technical Expert.

VIII. Data Recording and Management

The MultiRAE has datalogging capabilities. Up to 20,000 points can be downloaded to a PC with the serial number of unit, user ID, site number, and calibration date. The datalogging interval is programmable from 1 to 3,600 seconds. Direct readings can also be taken.

IX. Quality Assurance

After each use, the readout unit should be wiped down with a clean cloth or paper towel.

The external pre-filter should always be used. Replace when it looks very dirty or when the MultiRAE is in pump alarm with the filter on; and you can clear the pump alarm with the filter off.

X. References

RAE Systems MultiRAE Plus Data Sheet, revised 1-10/00.

RAE Systems “Using the MultiRAE Personal Multigas Monitor” training materials PowerPoint presentation, undated.

ATTACHMENT 1

Characteristics of the MultiRAE PID and Personal Multigas Monitor

I. Introduction

PIDs are used in the field to detect a variety of compounds in air. PIDs can be used to detect leaks of volatile substances in drums and tanks, to determine the presence of volatile compounds in soil and water, and to make ambient air surveys. If personnel are thoroughly trained to operate the instrument and to interpret the data, these PID instruments can be a valuable tool. Its use can help in deciding the level of protection to be worn, assist in determining the implementation of other safety procedures, and in determining subsequent monitoring or sampling locations. The MultiRAE serves as a PID as well as explosimeter, which detects Lower Explosive Limits (LEL), as well as other specified gases.

Portable MultiRAEs detect the concentration of organic gases, as well as percent oxygen, hydrogen sulfide, carbon monoxide, and others. The basis for detection is the ionization of gaseous species. The incoming gas molecules are subjected to UV radiation, which ionizes molecules that have an ionization potential (IP) less than or equal to that rated for the UV source. Every molecule has a characteristic IP, which is the energy required to remove an electron from the molecule, thus yielding a positively charged ion and the free electron. These ions are attracted to an oppositely charged electrode, causing a current and an electric signal to the LED display. Compounds are measured on a ppm volume basis, except for oxygen and LEL. Oxygen is measured as percentage by volume and combustible gas as percentage of LEL toxic gases.

II. MultiRAE or Equivalent PID

The integrated PID detects the concentration of organic gases, as well as a few inorganic gases. The basis for detection is the ionization of gaseous species. The incoming gas molecules are subjected to UV radiation, which is energetic enough to ionize many gaseous compounds. Each molecule is transformed into charged ion pairs, creating a current between two electrodes. Every molecule has a characteristic IP, which is the energy required to remove an electron from the molecule, yielding a positively charged ion and the free electron.

The PID probe consists of a 10.6 eV lamp standard. This probe detects many aromatic and large-molecule hydrocarbons. In addition, the 10.6 eV lamp detects some smaller organic molecules and some halogenated hydrocarbons. The primary PID calibration gas is isobutylene.

A protected catalytic bead is used for combustible gases. Interchangeable electrochemical sensors are used for oxygen and toxic gases.

III. Limitations

The MultiRAE instrument can monitor several vapors and gases in air. Unlike a single PID monitor, the MultiRAE can measure up to five different gases, thus providing a broader range of toxic gas detection.

The integrated PID instrument of the MultiRAE is generally not specific, and its response to different compounds is relative to the calibration gases. Instrument readings may be higher or lower than the true concentration. This effect can be observed when monitoring total contaminant concentrations if several different compounds are being detected at once. In addition, the response of these instruments is not linear over the entire detection range. Therefore, care must be taken when interpreting the data. Concentrations should be reported in terms of the calibration gas and span potentiometer.

MultiRAE monitors are small, portable instruments and may not yield results as accurate as laboratory instruments. They are relatively easy to use and interpret when detecting total concentrations of known contaminants in air, but interpretation becomes more difficult when trying to identify the individual components of a mixture. This instrument can be used as an indicator for combustible gases or oxygen deficiency.

ATTACHMENT 2

PID CALIBRATION AND MAINTENANCE LOG

Instrument Model Number

Instrument Serial Number

Calibration Gas

ppm

Date/Time	Initials	Battery Check	Calibration			
			Background Value	True Gas Value	Measured Gas Value	Adjust

COMMENTS:

F-22

Manual In-Situ Hydraulic Conductivity Test Procedures

ARCADIS
Infrastructure, environment, facilities

Imagine the result

Manual In-Situ Hydraulic Conductivity Test Procedures

Rev. #: 01

Rev Date: March 17, 2004

I. Scope and Application

The objective of this Standard Operating Procedure (SOP) is to describe the procedures to collect in-situ hydraulic conductivity data from the geologic formation immediately surrounding the screened interval of monitoring wells and piezometers by conducting falling-head slug tests and rising-head bailer tests. This SOP describes the equipment, field procedures, materials, and documentation procedures necessary to evaluate hydraulic conductivity.

This is a standard (i.e., typically applicable) operating procedure which may be varied or changed as required, dependent upon site conditions, equipment limitations, or limitations imposed by the procedure. The ultimate procedure employed will be documented in the project work plans or reports. If changes to the sampling procedures are required due to unanticipated field conditions, the changes will be discussed with DTSC as soon as practicable and documented in the report.

II. Personnel Qualifications

ARCADIS field sampling personnel will have current health and safety training including 40-hour HAZWOPER training, site supervisor training, site-specific training, first aid, and CPR, as needed. In addition, ARCADIS field sampling personnel will be versed in the relevant SOPs and posses the required skills and experience necessary to successfully complete the desired field work.

III. Equipment List

The following materials shall be available, as required, during in-situ hydraulic conductivity testing:

- Appropriate personal protective equipment as specified in the Site Health and Safety Plan
- Equipment decontamination supplies (See *Field Sampling Equipment Decontamination Procedures* SOP)
- Photoionization detector (PID)
- Plastic sheeting
- Stopwatch

- Polypropylene rope
- Lab-decontaminated disposable bailers
- Plastic bucket
- Appropriate field logs/forms
- Oil-water indicator
- White masking tape
- 10-foot measuring tape with gradation in hundredths of a foot
- Indelible ink pen
- Monitoring well keys
- Bolt cutters
- Monitoring well locks
- Field notebook.

IV. Cautions

Falling head tests are not applicable if the water table is below the top of the well screen interval.

Before performing a hydraulic conductivity test, allow monitoring well water levels to equilibrate with atmospheric pressure. Gauge water levels periodically for 5 to 10 minutes to monitor changes in head. Monitoring wells without vents (flush mounts) may not equilibrate with atmospheric pressure.

Repeatedly introducing the water-level indicator may alter the water-level measurements. Avoid splashing the probe into the water table or lowering the probe too far beyond the water table depth.

Avoid introduction of surface soil or other material into the monitoring well by staging down-hole equipment on a clean and dry working surface.

A minimum of two field sampling personnel are required to adequately perform this test.

V. Health and Safety Considerations

Volatile organics present in the monitoring well head space should be measured with a photoionization detector (PID) to evaluate potential hazards and recorded in the field logbook.

Well covers and casing should be removed carefully to avoid potential contact with insects or animals nesting in the well casings.

VI. Procedure

The following section describes in detail the specific procedure to hydraulic conductivity tests.

1. Identify site, well number, date, and time on the In-Situ Hydraulic Conductivity Test Log and field logbook, along with other appropriate hydraulic conductivity testing information.

2. Place clean plastic sheeting on the ground next to the well.

3. Unlock and open the monitoring well cover while standing upwind from the well.

4. Measure the volatile organics present in the monitoring well head space with a PID and record the PID reading in the field logbook.

5. Before performing a hydraulic conductivity test, allow the water level in the well to equilibrate with atmospheric pressure. Gauge water levels periodically for 5 to 10 minutes to monitor changes in head. Monitoring wells without vents (flush mounts) may not equilibrate with atmospheric pressure.

6. After the water level equilibrates, lower the water level probe into the monitoring well. When the tip of the probe reaches the static water level, place masking tape on the oil-water indicator tape from a reference point to 5 feet above the reference point.

7. Using a waterproof pen, mark the static water level on the masking tape at the reference point. Label the mark “S” for static water level.

8. Remove the oil-water indicator tape and probe from the well and place it on the clean plastic sheeting.

9. Measure a length of rope equal to the depth to static water level plus 10 additional feet.

10. Secure one end of the rope to the bailer and the other end to the well casing using a bowline knot.

11. Assign one person to be responsible for lowering the bailer into the well and recording time intervals in the log. Assign another person to be responsible for lowering the water-level probe into the well and locating and communicating water-level depths to person recording information in the log.

12. Slowly lower the bailer into the well unit until it is just below the water level.

13. Set stop watch.

14. When both people are ready, remove the bailer from the water and start the stop watch at the same time. Place bailed water into the bucket for subsequent proper waste management.

15. Lower the water-level probe into the well. Where the water level is first found, mark the tape as a reference point and record the time. Monitor and mark/record the water level on the masking tape at approximately 5-second intervals (recording the exact time intervals) until the water level returns to the initial conditions.

16. After 3 minutes, measure water levels at approximate 15-second intervals for 5 minutes.

17. After 8 minutes, measure water levels at approximate 1-minute intervals for 10 minutes. When water level readings stabilize, the length of the time intervals may be increased until the water level reaches the initial static level.

18. Changes in water level will be measured to the nearest hundredth from the masking tape and recorded along with the corresponding change in time reading.

19. Remove the masking tape from the water-level indicator and clean the probe as appropriate. Decontaminate the oil-water level indicator with an Alconox and water scrub, a distilled water rinse, a solvent rinse, and another distilled water rinse.

20. Secure the monitoring well prior to leaving by replacing the well cap and/or cover and lock it.

The above Steps 11 through 20 will be modified using Steps 11 through 18, as presented below, when a pressure transducer and automatic data logger are used.

The following section describes in detail the specific procedure to conduct slug tests with a pressure transducer and automatic data logger:

11. Deploy the pressure transducer in the well to a predetermined depth making sure it will be below the slug once the slug is fully submerged. Record this depth in the field notebook. The installation depth also depends on the amount of water displacement and the range of the pressure transducer. If the transducer is installed at a depth below its maximum range, damage may occur to the sensor and the output reading will not be correct. One PSI is equal to approximately 2.31 feet of water. If a 5 PSI pressure transducer is utilized, the range is 11.55 feet of water and the pressure transducer should not be installed at a depth below 11.55 feet.

12. Secure the transducer cable to the well with masking tape to eliminate any movement of the pressure transducer and ensure stability.

13. Measure out a length of rope and attach it to the slug. It is important that the slug does not come in contact with the transducer sensor once it is inserted in the well.

14. Run a rising head slug test by inserting the decontaminated slug and allowing the water level to equilibrate (i.e., return to within 0.05 feet of the static water level). Remove the slug and begin recording the data immediately. Collect the water level data according to a predetermined schedule while water levels rise and the aquifer returns to static or near-static conditions.

OR

Run a falling head test by inserting the decontaminated slug and immediately collecting the water level data according to a predetermined schedule while the water levels fall and the aquifer returns to static or near-static conditions (i.e., returns to within 0.05 feet of the static water level). Do not disturb the slug following its introduction into the well because this will adversely affect the test results.

15. Review the data to determine if a meaningful test has been conducted and perform a duplicate test if deemed necessary. (Results of duplicate test should be within a half order of magnitude). Record the start and finish time of the test.

16. Transfer the data from the data logger to the laptop computer and create a spreadsheet compatible file. Copy recorded data to a floppy disk.

17. Remove the pressure transducer and cable from the well. Decontaminate all test equipment that came into contact with the groundwater in accordance with the *Field Sampling Equipment Decontamination Procedures* SOP

18. Secure the monitoring well prior to leaving by replacing the well cap and/or cover and lock it.

VII. Waste Management

Decontamination water should be containerized and characterized in accordance with California Environmental Protection Agency's procedures for *Representative Sampling of Groundwater for Hazardous Substances* (CalEPA, 1995). Rinse water, personal protective equipment, and other residuals generated during equipment decontamination will be placed in appropriate containers and labeled. Containerized waste will be disposed of consistent with appropriate procedures as outlined in the *Handling and Storage of Investigation-Derived Waste* SOP.

VIII. Data Recording and Management

In-Situ Hydraulic Conductivity Test Log will be completed. Field equipment decontamination activities will be recorded in the field.

IX. Quality Assurance

Depending on data quality objectives, a duplicate hydraulic conductivity test may be conducted 24 hours after the initial test.

X. References

California Environmental Protection Agency (CalEPA). 1995. *Monitoring Well Design and Construction for Hydrogeologic Characterization.* Guidance Manual for Ground Water Investigations. July 1995.

F-23

In-Situ Chemical Oxidation

ARCADIS
Infrastructure, environment, facilities

Imagine the result

In Situ Chemical Oxidation

Rev. No. 2

Rev Date: July 27, 2010

I. Scope and Application

In Situ Chemical Oxidation (ISCO) refers to the subsurface injection of the following oxidizing reagents that are liquid or solid upon delivery:

- Sodium Permanganate (concentrated liquid)
- Potassium Permanganate (crystalline solid)
- Hydrogen Peroxide (liquid)
- Sodium Persulfate (crystalline solid)

These oxidants are typically blended in liquid form for injection although solid persulfate may be blended directly with soil using specialized mixing equipment. The objective of ISCO is to chemically convert contaminants into more benign components under strongly oxidizing conditions, typically through the creation of free radicals.

Supplemental Chemicals

Hydrogen peroxide must by catalyzed using iron (as ferrous sulfate or in a chelated form). Sodium persulfate is typically activated using hydrogen peroxide, steam (heat), chelated-iron, or caustic (sodium hydroxide). Special care is required when handling these materials as well.

Typical Operations

Oxidants may be injected through wells, trenches, direct push technology (DPT), specialized soil blending equipment, or auger flights to form an *in situ* reactive zone (IRZ). This SOP is intended for O&M activities related to IRZ sites, including injection and monitoring. Delivered concentrations vary based on oxidant type and manufacturer. Injection concentrations vary based on oxidant type, concentrations of target contaminants, and soil oxidant demand (SOD).

This SOP does not apply to the following:

- Injection of ozone, a gaseous oxidant
- The *ex situ* treatment of wastewater or groundwater in oxidation reactors using UV-catalyzed peroxide or peroxide-ozone mixtures (HiPOx).

This SOP is not a substitute or replacement for a design or operation manual. Specific implementation requirements for the site, oxidant, and contaminants are defined the project design document and manufacturer's instructions.

II. Personnel Qualifications

All personnel working on ISCO projects should have the following minimum qualifications:

- First aid training
- Medically clearance under the ARCADIS medical surveillance program
- Current respirator fit testing

III. Equipment List

See sections VI and VII for an equipment list and description.

IV. Hazards

Hazard Analysis

The primary risk associated with oxidants is exposure: chemical burning of the skin, eyes, and mucous membranes. Other risks include pressurization of closed systems, excessive heat release, and fire. Oxidizers may react with combustible materials (such as fuels, paper, or solvents) or reducing agents (such as metals or sulfites).

All ISCO projects require at least two personnel in the field, both of whom have current first aid training, are medically cleared under the arcadis medical surveillance program and have current respirator fit testing.

Exposure

Methods of handling oxidants should prevent bodily contact and prevent the generation of dust or mists. Risks can be minimized by designing the injection process to be intrinsically safe using the lowest possible concentrations, flow rates, and pressures in the field. The health effects from exposure to these materials are generally acute and localized to the point of exposure. General health concerns for all strong oxidants include: inhalation, ingestion, skin contact, and eye contact.

Inhalation

Oxidants are not volatile and inhalation risks are the result from the formation of airborne dusts and mists of the oxidizing materials. Dry chemicals such as potassium permanganate and sodium persulfate may represent inhalation hazards due to the formation of airborne particulates prior to mixing. Handlers of the materials shall minimize dust generation during handling and mixing. Hydrogen peroxide mist can be evolved during decomposition or heating. Staff shall maintain liquid temperatures within design limits provided in the project design document. Exposure to oxidants causes irritation to the upper and lower respiratory tract. Symptoms may include sore throat, shortness of breath, inflammation of nasal passages, coughing, and wheezing. Inhalation of these materials may cause pulmonary edema which constitutes a medical emergency. Any exposure to these materials may cause an allergic reaction in some people resulting in asthma-like symptoms and life-threatening shock.

The onset of adverse health effects from inhaling oxidants may not be felt immediately and may take several hours to develop.

Ingestion

Ingesting oxidants can result in severe irritation and possible burns to the mouth and throat. In addition gastrointestinal disturbances may be expected with symptoms of nausea, abdominal pain, and vomiting.

Skin Contact

Skin contact with oxidants may result in severe skin irritation or burns. Symptoms include redness, itching and pain. Exposure may cause allergic skin reactions in some people.

Eye Contact

Eye contact with the oxidant materials can cause severe irritation or burns with eye damage. Minimizing exposures to oxidants can be accomplished by:

- Using the appropriate personal protective equipment (Section 4.0)
- Following manufacturer's instructions as provided in Material Safety Data Sheets (MSDS)
- Use of chemically-compatible materials (determined during design)
- Handling and mixing materials in a controlled, deliberate manner (as determined during design)
- Properly disposing of or returning empty containers (e.g., empty persulfate packages). Details of these exposure control techniques are outlined in this document and in the project specific Health and Safety Plan (HASP).

Pressurization

Decomposing oxidants can evolve large volumes of gas and/or vapor, can accelerate exponentially with heat generation, and create significant and hazardous pressures if contained and not properly controlled or mitigated. Oxidants should be blended slowly and under supervision in accordance with the project design and manufacturer's instructions. System design should include adequate ventilation and pressure relief controls. Handlers should not transfer or mix oxidants in containers that have not been passivated. Back pressure on the injection line should be monitored continuously and injections halted if pressures exceed the design limits. All site workers should know how to quickly halt injections (i.e., operation of isolation valve or kill switch to stop flow).

Heat Release

Oxidants can decompose in storage under conditions of moisture (water/water vapor) and/or excessive heat causing release of oxides and oxygen that supports combustion. Decomposition is an exothermic reaction that could form a high temperature melt. There is a greater concern of heat release under the following conditions:

- Shallow water table
- Buildings or enclosures near the injection points
- Higher oxidant concentrations
- Presence of non-aqueous phase liquids (NAPLs)

An oil/water interface probe should be used to measure product thickness in injection wells and nearby monitoring wells ***prior to injection*** if the potential exists for LNAPL (petroleum). ***Oxidants should not be injected in potential LNAPL areas without prior approval of the ARCADIS In Situ Remediation discipline leader or designee, and Client .*** Peroxide and persulfate (i.e., those oxidants capable of forming free-radicals) have a greater potential for heat release than

equivalent concentrations of permanganate. For all injections, groundwater temperature should be monitored in the well closest to the injection point as a control measure (and to evaluate oxidation progress).

Fire

The DOT defines an oxidizer as a substance that yields oxygen readily to stimulate the combustion of organic matter. Oxidants themselves are not combustible but supply oxygen and heat that are capable of creating combustible conditions.

Oxidants can become an ignition source if allowed to dry on clothing or other combustible materials. Oxidants should be prevented from contacting clothing and other combustible materials. Secondary containment materials should be inert (e.g., do not use hay bales).

Material Safety Data Sheets

General MSDS documents for oxidants and sodium hydroxide can be found at the following links (oxidant, manufacturer, concentration). Always use the latest MSDS document from the manufacturer when assessing potential safety issues.

- Hydrogen peroxide (FMC, 40-60 percent):
  http://www.h2o2.com/intro/FMC_MSDS_40_to_60.pdf
- Potassium permanganate (Hepure, solid):
  http://www.hepure.com/msds/msds-potassium-permanganate.pdf
- Sodium permanganate (Hepure, 40 percent):
  http://www.hepure.com/msds/msds-sodium-permanganate-40.pdf
- Sodium persulfate (FMC, solid):
  http://msds.fmc.com/msds/100000010343-MSDS_US-E.pdf

These links are current as of July 2010. For generic MSDS for these materials, reference the HazMat Zone on the Health and Safety APEX site at the following link: http://www.hz.genium.com (username: arcadis_library password: library1

V. Health and Safety Considerations

Personal Protective Equipment

Personal protective equipment will be stipulated in the project HASP and/or JSA, but should include at a minimum:

- ANSI compliant safety goggles;

- Face shield and appropriate head and neck splash protection;
- Protective coveralls with a polyester content greater than 65 (specific coverall material will be documented in the project-specific HASP;
- Oxidant-specific chemically compatible (e.g., rubber or neoprene) gloves and boots.
- Oxidant-specific chemically compatible (e.g., rubber or neoprene) apron.

If conditions warrant respiratory protection per the guidance of the project HASP or JSA, workers will wear NIOSH-approved full face piece air purifying respirators equipped with cartridges appropriate for the oxidizer. (see the project-specific HASP) Consult HASP or JSA for action levels or situations where respiratory protection is required in lieu of safety goggles and face shield.

First Aid

First aid for chemical burns begins with ending the exposure. SPEED IS ESSENTIAL. Verify the following before starting work:

- You have notified local emergency medical professionals of the materials being used and the possible emergency scenarios
- You have adequate cell phone coverage in all work areas
- You know the current 911 address for the work areas
- You have an available source of water for flushing exposed skin
- You have a working ANSI-compliant eyewash
- You have defined egress to an area accessible by ambulance
- Additional clothing or coveralls are available in the event that primary clothing becomes contaminated

A chemical burn on the skin can be deeper and larger than the burn first appears. The first aid trained staff should monitor your burn closely and seek medical help if you experience any severe symptoms or pain that cannot be alleviated.
General first aid requirements are provided below for common oxidizers used by ARCADIS. Refer to the manufacturer-specific MSDS or technical specifications for any specific first aid treatment for the actual oxidizer used.

Oxidants

Contaminated clothing should be removed immediately, and the affected area should be flushed under cold running water for 20 minutes. Use large amounts of water. Care will be taken to avoid allowing the runoff water contaminate other parts of the body. If solid material contacts bare skin, the person should gently brush away any solid material. Immediate irrigation can reduce the depth and size of the burn.

Inhalation: Remove to fresh air. If breathing is difficult, give oxygen. Do NOT use mouth-to mouth resuscitation. If breathing has ceased apply artificial respiration

using oxygen and a suitable mechanical device such as a bag and a mask. If breathing is difficult, give oxygen. Get medical attention immediately.

Ingestion: If swallowed, DO NOT INDUCE VOMITING. Give large quantities of water. Never give anything by mouth to an unconscious person. Get medical attention immediately.

Skin Contact: Immediately flush skin with plenty of water for at least 15 minutes while removing contaminated clothing and shoes. Get medical attention immediately. Thoroughly wet and then discard clothing and boots that have come in contact with oxidants.

Eye Contact: Immediately flush eyes with plenty of water for at least 15 minutes, lifting lower and upper eyelids occasionally. Do NOT allow victim to rub or keep eyes closed. Get medical attention immediately.

Sodium Hydroxide (if used as activator for persulfate)

Ingestion: Provided the victim is conscious, wash out mouth with water, give 200-300 ml (6-10 ounces) of water to drink. Do not induce vomiting.

Skin Contact: Remove contaminated clothing. Drench with large quantities of water.

Eye Contact: Immediately irrigate the eye with eye wash solution or clean water for at least 15 minutes, holding the eye open. Continue until medical attention can be obtained.

VI. Engineering Controls

Specific controls for oxidant delivery, storage, handling, injection, and disposal will be defined in the project design document. The following are general guidelines.

Storage

Oxidants should be isolated from incompatible materials prior to use to prevent decomposition. Handling procedures should maintain the oxidant materials at the same level of purity and as that of the original material from the manufacturing process. The MSDS for the material will have additional storage instructions:

- Storage of oxidants should be restricted to its original shipping container or to properly designed containers made of compatible materials which are vented and have been thoroughly cleaned of reactive impurities (i.e., passivated).
- Oxidants that been removed from the original shipping container should not be returned to it.
- All containers must be stored away from sources of direct heat and combustible materials. Combustible materials include wood, paper, oil, etc., organic materials such as alcohols, acetone, and other ketones; aldehydes, and their anhydrides; glycerol, cotton (cellulose), and general trash.

- Liquid oxidants should be vented in accordance with the manufacturer's instructions and MSDS.
- Adequate ventilation and ample water supply for thorough flushing of accidental spillage on personnel and property should be provided.

Oxidants should be protected from incipient moisture to prevent decomposition. Storage facilities should shield materials from rain and maintain separation from the ground to prevent contact with stormwater.

Oxidants must be stored in accordance with National Fire Prevention Association (NFPA) guidelines. All storage tanks should be labeled as to contents and chemical hazards. All process lines should be labeled for content and flow direction.

Safety Equipment

Specific safety equipment for the project will be defined in the project HASP and/or Job Safety Analysis (JSA). In general, the following equipment should be available on every ISCO project:

- Emergency PPE (refer to Section V)
- ANSI compliant eyewash and emergency shower with drench capabilities;
- First aid kit; and
- Water fire extinguisher or water hose capable of flushing fire with water (do not use dry chemical, CO2, or foam extinguishers on fires involving oxidizers)

Equipment should be inspected regularly. Where possible, the water source used for mixing should be valved so a separate spigot is available that could be used for flushing of bodily parts exposed to oxidants (see First Aid, Section 5.0).

VII. Procedure

Spill Prevention and Control

Spills may occur during unloading or moving of delivered oxidants, during mixing of oxidants and/or activators, and during injection.

Delivery and Storage: The storage location should be inspected prior to delivery for adequate access, stability of the ground, and absence of impediments to level loading. Oxidants should be stored in accordance with the manufacturer's instructions. Delivery should be coordinated to allow immediate use and minimize storage time. If extended storage is necessary, oxidants must be kept in a secure location. The design document will dictate the need for berming or other secondary containment requirements.

Mixing: Staff shall handle oxidants and activators in accordance with the project design protocols and manufacturer's instructions. All materials that come in contact with the oxidant or activator must be chemically compatible, including fittings (verify during design). Mixing of chemicals should be done gradually and under constant

supervision. Staff will closely follow the project design document and mix only enough oxidant to be injected with the allowable daily work schedule. **Deviation from the approved mix design is prohibited.**

Injection: All process lines shall be pressure tested for leaks with water prior to addition of oxidant or activator. Operating pressures and temperatures shall be monitored regularly and maintained within design guidelines. Unless the system is designed for automated operation, all injections should be monitored continuously by at least two workers. System injection shall be suspended if there are not at least two workers in the injection area. In case of a small spill, staff will attempt to contain and collect the material for neutralization or disposal as a hazardous waste (reactivity). The Project O&M Plan will have specific spill response instructions for the oxidizer used. In general, if the spill poses risk of fire, dilute oxidant with copious quantities of water and contact the local fire department or facility emergency responder.

Department Of Transportation And Department Of Homeland Security Compliance

Transport and shipment of oxidizers is regulated by the US Department of Transportation. Workers involved with transport of this material on public roadways must be trained in the safe and proper transport of hazardous materials. Although specific variations may exist, the general transport of solid or liquid oxidizers is subject to the following:

- Oxidizers are limited to 30 kg (66 pounds) for solids and 30 L (8 gallons) for liquids under DOT Materials of Trade exemptions. These materials must be properly labeled.
- Volumes of these materials in excess of Materials of Trade (MOT) limits and in less than 119 gallons capacity (net mass <400 kg [882 pounds] and <119 gallons capacity for solids) (non-bulk packaging) requires full DOT compliance associated with labeling, markings and shipping papers.
- Oxidizers transported in volumes >119 gallons (net mass >400 kg [882 pounds] and >119 gallons capacity for solids) (bulk packaging) requires the transport vehicle to be placarded in addition to requirements for non-bulk packaging. Bulk transport of oxidizers requires additional FMCSA requirements of commercial driver's licensing with hazmat endorsement.

DOT shipping guides for these materials can be found on the ARCADIS internal APEX Health and Safety site.

Large bulk shipments or storage of bulk quantity storage of selected oxidizers may be subject to Department of Homeland Security requirements for highly hazardous chemicals. Contact the ARCADIS DOT Manager for additional information.

All shipments or transport of oxidizers either in pure or diluted concentrations, requires a shipping determination to be performed by a trained individual. This also includes samples collected from injection wells or monitor wells where oxidizer materials may be present.

Environmental Protection Agency Compliance

Prior to commencing injection activities all injection wells need to be registered with the Environmental Protection Agency's (EPA) Underground Injection Control (UIC) program. Non-hazardous injection wells for remediation are categorized as Class V wells. Depending on the EPA region, permitting authority may reside with the EPA or may be delegated to state agencies. Regardless of the permitting authority, UIC registration is necessary and must be completed prior to beginning injection.

F-24

Anaerobic Microbial In-Situ Reactive Zone Injection, Operation, and Monitoring

Imagine the result

Anaerobic Microbial In-Situ Reactive Zone Injection, Operation, and Monitoring

Rev. #: 1

Rev Date: September 2012

I. Applicability

In-Situ Reactive Zone (IRZ) technology refers to a wide range of in-situ remedial approaches, incorporating various substrates (reagents) including, but not limited to, carbohydrate solutions, organic acids, chemical reductants, alcohols, and oxidants. IRZs can be further characterized based on the treatment process, with examples being microbial reactive zones (e.g., enhanced reductive dechlorination [ERD], metals precipitation, and aerobic oxidation) and chemical reactive zones (e.g., chemical oxidation zones and chemical reducing zones). An IRZ is essentially an engineered subsurface zone where contaminants are intercepted and permanently immobilized or degraded. For instance, ERD is a specific anaerobic IRZ approach for treatment of chlorinated volatile organic compounds (CVOCs). The following standard operating procedure (SOP) specifically relates to anaerobic/reducing microbial IRZ applications.

This standard SOP applies to in-situ remediation projects that create anaerobic/reducing conditions through the introduction or injection of carbohydrates, alcohols, and/or organic acids solutions (e.g., molasses, corn syrup, whey, methanol, lactate, etc.) into the subsurface. This SOP is intended for O&M activities related to IRZ sites, including injection and monitoring.

This SOP does NOT apply to the injection of chemical oxidants (e.g., hydrogen peroxide) or reductants (e.g. ferrous sulfate).

Typical Operations: Reagent solutions can be injected into the vadose zone or groundwater using dedicated wells, direct push technology, or trench systems. The purpose of the injections is to create an anoxic or anaerobic environment that facilitates the reduction of organics (such as chlorinated volatiles) or precipitation of metals (such as hexavalent chromium). Injection solutions are typically 1 to 2 percent carbohydrate in water by weight but may vary based on project requirements.

II. Hazard Analysis and Protocols

Prior to implementing an anaerobic IRZ, a site-specific and application-specific hazard analysis must be conducted. There are many variances in the application of the technology, including automated mixing and injection systems, manual mixing and injection, and injection of pre-mixed reagent solutions. With each IRZ application comes inherent risks associated with the type of equipment utilized, the methods for injection, and the selected reagents. Common to all anaerobic IRZ sites is the risk associated with pressurized systems and potential gas build-up (refer to Sections II.2, II.3, and II.4). The following summarizes the primary risks and related control

measures identified for typical anaerobic IRZ applications, including physical hazards (e.g., lifting and slips/trips/falls) and hazards specific to the technology.

1. Lifting

Muscle strains, joint fatigue and/or injury can occur from moving/transferring injection equipment (e.g., hose reels, pumps, etc.) and heavy containers of pure molasses or other reagents, for instance a typical five-gallon bucket of molasses weighs approximately 59 lbs.

Controls: The major lifting hazards are muscular or skeletal damage caused by improper technique. Proper lifting technique involves the following procedures:

- Stretching your muscles before lifting (e.g., squatting without weight, circling arms).
- Testing weight before fully exerting muscles. If uncertain of the weight or your strength, get assistance from a co-worker or mechanical lifting device.
- Planning the move, make sure intervening space is clear of trip hazards, including wet or muddy areas.
- Lifting with major muscle groups like legs, rather than the back. Bend your knees, squat slowly with your back straight, firmly grasp the bucket handle, and lift slowly with your legs. This is the most important rule to follow when lifting.
- When lifting above the waist, use two hands and pull slowly with the object centered along the major axis of the body.
- Another potential hazard is repetitive motion injury, from repeating the same movements over an extended time. Make sure to rest between lifts.
- TIP: If using pails of molasses, pour half of the full molasses bucket into a spare, clean bucket and then use the half-full bucket for adding molasses to the transfer tank. This reduces the potential for muscle fatigue and spills.
- See Section III for lifting engineering controls.

2. Active Injection Pressurization

During active injections, pressure buildup can occur at the injection point/wellhead and in the formation for a variety of reasons. This is largely controlled by flowrates and aquifer characteristics. Uncontrolled pressurization can cause formation failure, well failure, or other short-circuiting. If not by design, formation failure can affect performance of the remedial technology by limiting distribution of the injection solution to very discrete failure planes in the formation, potentially reducing effective contact with the target contaminants. Well failure can create the risk of explosive pressure relief through the wellhead connections, or leakage of the injection solution to land surface along the casing, where it can create odors and attract pests. Other short-circuiting pathways include old borings/preferential pathways that can provide conduits for injection solution to leak to land surface. Adjacent wells can also become pressurized creating the risk of explosive pressure relief through the wellhead.

Controls: Current design guidelines require careful consideration and field management of injection pressures (see Section III - Engineering Controls). If short-circuiting to the land surface is observed below the planned operating pressures, discontinue the injection and contact the project technical team for guidance. Wellheads/injection assemblies should be equipped with a pressure relief valve (manual or automated) and a restraining cable or tether connecting the well cap with the well (see Section III -,Engineering Controls). This is discussed further in the next section.

3. Post-Injection Wellhead Pressurization

Fermentation reactions create gases as metabolic by-products such as methane, carbon dioxide, and hydrogen sulfide. Where excess organic carbon is present, monitoring wells or other structures that penetrate the water table offer a path of least resistance for the migration, collection, and accumulation of these gases. In depositional environments that do not allow for dissipation of these gases, excessive pressures can build up within the headspace of a well, creating the risk of explosive pressure relief via the wellhead. For example, under pressurized conditions a well cap may become a projectile when opened, releasing from the wellhead at great force.

Controls: Current design guidelines require installation of a pressure relief valve (manual or automated) and a restraining cable or tether connecting the well cap with the well (see Section III - Engineering Controls). For wells with a relief valve:

- Wear protective gloves and full-face shield attached to hard hat.

- To the extent possible, do not access the potentially pressurized well with your face or body immediately over the wellhead in the event of a sudden release of pressure and/or potential projectile (i.e. well cap).

- Prior to opening the relief valve, tubing should be attached to the valve outlet and routed to a containment bucket or drum at a location away from the operator. This will prevent the discharge of hydrogen sulfide and methane gases or entrained groundwater potentially containing carbohydrates, buffers, and contaminants from contacting the valve operator.

- Open valve SLOWLY by twisting slightly until release of gas is first heard, allowing well to vent, and then twisting valve slightly again and repeating process until no more gas is heard leaving the valve. Once the valve is totally open, the well cap can be safely removed. Since the well gases may contain hydrogen sulfide or methane, the valve and open end of tubing should be away from your face.

- When possible, label wellheads in order to notify the field technician of the potential hazards related to pressure build-up.

Older well installations may not currently be equipped with a relief valve or restraining cable. Where the installation allows, older installations should be retrofitted with a restraining cable and/or pressure relief valve. Where there is no relief valve or cable, procedures for opening a well cap are:

- Wear protective gloves and full-face shield attached to hard hat.

- Keep head away from the well head cover while opening.

- Open the well cap in a controlled manner, turning the cap or retaining nut ¼ turn at a time or slowly releasing the gripper plug. If you can hear pressure being released, stop and allow the pressure to bleed off until there is no further release.

Fermentation of the molasses solution within the injection system or lines can cause a pressure buildup overnight if the lines are not fully drained and all valves are not left open. Follow defined shut-down procedures upon completion of the daily injections.

Pressurization can also occur in nearby monitoring wells. Use caution when opening all well heads within an injection zone or at an IRZ site.

4. Ambient Air Quality

Carbohydrate injections are typically designed to create both sulfate reducing and methanogenic conditions in the aquifer, particularly in reductive dechlorination applications. Methane is potentially explosive in concentrations between the lower explosive limit (LEL; 5% by volume or 51,000 ppmv) and the upper explosive limit (UEL; 15% by volume or 150,000 ppmv) if exposed to air. Hydrogen sulfide is a toxic gas for which the OSHA permissible exposure limit (PEL) is 20 ppmv and the immediately dangerous to life and health (IDLH) limit is 100 ppmv. In addition, applicable exposure criteria for volatile organic contaminants that may be present in groundwater should also be evaluated as part of the ambient air monitoring.

Controls: No potential ignition sources should be used at or near wellheads within an IRZ. This includes lighters, cigarettes, and hot-cutting instruments (e.g., torches, etc.). Ambient air quality monitoring should be conducted using the protocols outlined in SOPs F-19, F-20, and F-21. In addition, the following precautions should be taken:

- Wells should always be approached and opened from an upwind position and be allowed to vent prior to commencing work.

- If ambient air monitoring around the wellhead detects methane concentrations above 25 percent of the LEL (12,500 ppmv), or hydrogen sulfide concentrations above 50 percent of the PEL (10 ppmv) immediately stop work and move to a safe distance upwind of the well. Allow the well to vent for a minimum of 5 minutes prior to re-testing the ambient air quality and commencing work. If elevated concentrations persist, immediately stop work and contact the RTC and/or the Project Manager for guidance on further actions.

5. Traffic Control

The need for traffic controls as part of the injection and/or bulk substrate delivery logistics must be considered to prevent vehicle or worker accidents.

Controls: Designate a safe delivery location with good access and visibility. Inform site personnel of schedule deliveries in advance. Vehicles should not back up until all site personnel have been notified and only with guidance from someone outside the vehicle. Wear approved high-visibility safety vest and place high (42 inch) traffic cones at all exposed corners of the vehicle and work areas.

6. Tripping and Slipping

Discharge piping, buckets, pumps, and associated equipment constitute potential trip hazards. Molasses and other carbohydrate solutions can create slip hazards either through spills or surfacing, where excess carbohydrate solution emerges from the injection well.

Controls: Maintain a clean and clear work space. Follow planned pathways between work areas. Have an assigned area for staging materials and equipment. Keep trash and spent materials in an assigned area away from work flow. Remember that precipitation and process water can change walking conditions. Spills should be cleaned up immediately. All remedial injection systems should be equipped with a spill control kit appropriate for the material having the potential to be spilled. Controlled injection procedures should be used, with observation of potential surfacing locations that may result in a slipping hazard.

7. Injection Materials

Hazard ratings for typical injection materials are given in Table 1. Contact the Project Health and Safety Manager if you are using a material not listed in Table 1.

Controls: Injection materials should be stored in approved containers. Spent carbohydrates can attract nuisance insects (e.g., bees, fire ants) so spills should be cleaned up immediately.

III. Engineering Controls

Engineering controls provide a mechanism for alleviating potential hazards through proper system design, protocols for implementation, and mechanical means for assisting in performing specific project tasks. The following sections summarize various engineering controls which may be implemented at a site where an anaerobic microbial IRZ approach is being applied.

1. Lifting

As established by the National Institute of Occupational Safety and Health (NIOSH), the maximum lifting load for one person is 51 lbs (this is the weight requirement for a one-time lift, and does not account for repetitive lifting of heavy objects). Five-gallon buckets and drums of injection materials (the most common methods of portable storage) meet or exceed this requirement.

To reduce excessive lifting of heavy objects and reduce awkward body positions, use of bulk chemicals delivered by tank truck or large totes is preferred to the use of buckets or drums of injection materials; however, if use of buckets/drums is determined to be the most practicable option, then additional engineering measures are required such as:

- Hand trucks, carts, drum dollies
- Power lifts (installed on van or truck, or operated separately)
- Pumping of material from containers into the injection system

2. Well Pressurization

Control of wellhead pressurization is a two-part process: preventing excessive conditions in the well and using a properly designed well and distribution system.

2.1 Preventing Excessive Conditions

Using excessively high concentrations of readily degradable carbohydrates (e.g., 10% molasses solution) has greater potential for resulting in well pressurization due to biological gas buildup in the wells than lower concentration solutions. Injection solutions with total organic carbon concentrations of 8,000 mg/L or less (i.e., equivalent to a 2% by volume molasses solution) should be used to minimize the potential for well pressurization.

Wells can also become pressurized by the injection process. During injection, well conditions should be monitored using flow meters and pressure gauges and the injection pressure should not exceed the site-specific design pressure for the injection well. The design engineer should provide a table identifying the pressure not to be exceeded for each injection well during an injection event.

Upon terminating an injection, the well head pressure should be observed and if necessary, excessive pressure in the injection line relieved prior to disconnecting the injection assembly.

Allowing high concentration carbohydrates to remain in the well after injection facilitates excessive pressures and reduces the effective distribution of carbon in the aquifer. A clean water flush following injection will reduce carbon concentrations in the well and lessen the likelihood of pressurization; however, this should be determined in the design of the remedial approach and injection system. If necessary, provide three well volumes of tap (or other clean) water immediately following the injection. While

upgradient carbon will return to the well over time, the resulting concentrations will be lower than the injected concentration.

2.2 Proper Well Head Design

Only threaded or cam-lock type well caps should be used for wells where potential pressurization due to biological gas production may be reasonably expected to occur. Slip-type, friction-fitted well caps should not be used. As an added safety measure, each well cap should be fitted with a tether or lashing to prevent an uncontrolled blow-off of the cap should excessive pressure build up occur. A manual pressure relief valve installed either in the well cap or solid well casing just below the well cap should be used to reduce pressure in a controlled manner.

2.3 Substrate Delivery System

The piping and/or hosing system used to deliver carbohydrate solution to the injection wells/trench shall be designed and constructed for the maximum injection pressures, plus a 100 percent safety factor. For example, if maximum injection pressure is estimated to be 20 psig, then the system should be designed and constructed for 40 psig. Pipe, hoses, and fittings shall be rated for the selected design pressure.

3. Methane

Should ambient air concentrations exceed 13,000 ppmv (25 percent of the LEL), suspend work and contact the RTC for engineering controls. It is unlikely that methane concentrations will exceed the action limit above in open, well-ventilated areas. Note that methane can settle in low lying areas, depressions or pits (i.e. well vaults). Particular care should be taken in closed or semiconfined spaces.

4. Hydrogen Sulfide

Should ambient air concentrations remain above 10 ppmv (50 percent of the PEL) after venting, suspend work and contact the RTC for engineering controls. It is unlikely that hydrogen sulfide concentrations will exceed the action limit above in open, well-ventilated areas. Particular care should be taken in closed or semi-confined spaces, as well as low-lying areas.

5. Tripping and Slipping

Consider use of non-slip, perforated all weather matting in unloading or other areas with an elevated potential for spills.

Piping, hoses, and wiring running from the system to the injection well should be placed in a manner that prevents damage from pedestrian, vehicular, or mowing/lawn maintenance equipment and also avoids hazards associated with slips, trips, and falls. Examples include:

- Run piping or hoses along building walls.
- Run multiple pipes or hoses along a common corridor that is visually identified using cones or flagging.
- Set up designated cross-over points for piping or hosing that must run across a walkway. Use ramps at these cross-over points to provide for smooth access across piping, hoses, or wiring.

Avoid jumping off trailer or truck beds. Use designated access points such as drop-down ramps. Where possible, use hand rails to provide at least three points of contact when entering or exiting these elevated areas. Apply skid-proof flooring on access points of the trailer.

Check all water and solution connections prior to turning on water or pumps for pressurized injection to avoid hazards associated with wet surfaces due to spills or leaking joints.

IV. Personal Protective Equipment

One of the key elements to safely conducting any work is use of the proper personal protective equipment (PPE). The site-specific requirements for PPE should be assessed on a site-by-site basis by a qualified H&S professional and incorporated in to the project HASP. The following provides general guidance on the use of PPE at anaerobic microbial IRZ sites.

1. First Aid Kits

All field vehicles and dedicated facilities will have their own designated first aid kit. A first aid kit will be on site during any remedial injection work activity. All site personnel must know the location of the first aid kit and the best route to the nearest emergency medical center before starting work.

- For enclosed trailer or building mounted systems, a first aid kit will be permanently mounted in the trailer housing or in the building.

- An eyewash bottle will be available for all remedial injection activities regardless of the material used in the injection system.
- Any special response products specified by the injection product Material Safety Data Sheet (MSDS) will also be readily available.
- First aid kits should include relief for insect stings and bites (e.g., Sting Eze).

Those who are known to have severe bee sting allergies should carry a self-injection kit of epinephrine (e.g., EpiPen), along with antihistamine tablets, for emergency treatment. However, they should still seek medical care after any type of reaction to a bee sting and notify medical personnel of any medications.

2. General PPE

All personnel must wear an approved safety vest when outside of their vehicle. Hard hats are strongly recommended in field locations and are required whenever there is an overhead hazard (e.g., near a drill rig).

3. Material-Specific PPE

The Material Safety Data Sheet (MSDS) should be reviewed by the design team for specific PPE requirements, and the design should minimize the potential for employee contact with the material. In general, the PPE requirements for various injection materials are presented in Table 2.

V. Safety Inspection

Safety inspections should be conducted prior to conducting all activities that require operation of equipment, vehicles, and systems, and prior to conducting field activities. A thorough safety inspection can help to identify potential hazards prior to implementing the work and ultimately reduce potential risks to the site worker. A typical safety inspection would include a review of project documentation, equipment inspection, identification of potential hazards, and completion of all necessary documentation and record keeping.

1. Activities

The injection system must be inspected prior to injection by the Project Engineer or their approved designee.

- Inspect the system daily while active injections (pressure injection or gravity feed) are being performed. The inspection schedule may be modified for longer periods if specified by the Project Engineer or if the emergency shutoff device is equipped with communication capabilities.

- Fixed systems having not been used for extensive periods of time shall be inspected by the Project Engineer (or their approved designate) prior to restarting the injection process.

- Inspections will include, but are not limited to:

  - Hose, pipe, and wiring connections including any required safety lashings;
  - Integrity of hoses and pipes;
  - Integrity of tanks or other containment vessels used in the system;
  - Protective devices for hose, pipes, and wiring;
  - Ventilation systems (as applicable);
  - Pump and mixer working condition and safety devices provided by the manufacturer or provided as part of the system design (as applicable);
  - Valve operation;
  - Operability of hand or power tools;
  - Completeness of first aid kit;
  - Placarding and traffic controls;
  - Suitability of injection material storage; and
  - Housekeeping.

2. Reporting

All inspections shall be logged in the field notebook or designated forms for the project. Any deficiencies found during inspections will be corrected in accordance with the requirements of Sections II and III prior to continuation of injection work.

3. Documentation

- Injection materials or other chemicals used as part of the remedial injection work shall have a MSDS on site.

- For food or feed-grade products or ingredients used for injection, a MSDS may not be available. In this situation a reasonable attempt will be made by the Health and Safety Manager (HSM) to ascertain safety information related to the product used.

- All containers holding injection materials or diluted injection materials will be properly labeled with the chemical name and appropriate hazard warning.

4. Tailgate Meetings

The following will be discussed, at a minimum, at daily "tailgate" safety briefings:

- Physical hazards;
- Biological hazards (e.g., bees, ants);
- Chemical hazards;
- Protective clothing/equipment to be used;
- Locations of emergency equipment;
- Location of nearest hospital;
- Location of nearest telephone at sites where cellular telephone service is not available;
- Any changes from the initial safety briefing; and
- Any new hazard identified during the course of work.

5. Trailers

A checklist for trailer-mounted injection systems is included as Attachment 1.

VI. Accident Procedures

Injured staff should be given immediate first aid and then escorted to the nearest emergency care facility, if necessary. Directions to the emergency facility will be in the Site-Specific Health and Safety Plan. The ARCADIS Incident/Near Miss Investigation Report should be submitted to the Project Health and Safety Manager within 24 hours of an accident or injury or within 72 hours of a near miss event.

VII. Training

- All site workers involved with remedial injection must have training commensurate with the duties they are to perform, including subcontractors.

- Personnel will have completed the 40-hour Hazardous Waste Operations and Emergency Response (HAZWOPER) health and safety training (unless approved by the Regional Health and Safety Manager for 24-hour site-specific training), and will be current in 8-hour HAZWOPER health and safety refresher training, if applicable.

- Personnel who perform supervisory roles during field work should be trained in 8-hour OSHA Supervisors training.

Table 1. Hazard Information for Injection Materials

Injection Material	NFPA Rating				Action Levels	Incompatible Materials	Fire Extinguisher Method	Neutralization Required
	H	F	R	S				
Molasses	0	0	0	NA	TWA: NA STEL: NA IDLH: NA	None specified	Dry chemical	No
Whey	0	0	0	NA	TWA: NA STEL: NA IDLH: NA	None specified	Dry chemical	No
Corn Syrup[1]	0	1	0	NA	TWA: NA STEL: NA IDLH: NA	Avoid contact with oxidizing materials	Dry chemical	No
Vegetable Oil[1]	0	1	0	NA	TWA: NA STEL: NA IDLH: NA	Avoid contact with oxidizing materials	Dry chemical	No
Methanol	1	3	0	NA	TWA: 200 ppm STEL: 250 ppm IDLH: 6,000 ppm	Acids, peroxides, alkali metals	Dry chemical	No
Lactate	1	0	0	NA	TWA: NA STEL: NA IDLH: NA	Strong oxidizing agents, bases, and acids	Dry chemical	No
HRC®	1	0	0	NA	TWA: NA STEL: NA IDLH: NA	Strong oxidizing agents, bases, and acids	Dry chemical	No
Sodium Bicarbonate	0	0	1	NA	TWA: NA STEL: NA IDLH: NA	Reacts with acids to form carbon dioxide	None specified	No
Other	Consult manufacturer MSDS and technical literature for hazard information							

Notes:

[1] Hazards based on corn oil.

H- Health, F-Flammability, R-reactivity, S-Specific Hazard, TWA- 8 hour Time Weighted Average, STEL- Short Term Exposure Limit, IDLH-Immediately Dangerous to Life and Health, NA-Not Available or Not Applicable

Table 2. Personal Protective Equipment Requirements for Reducing Materials

Injection Material	Eye Protection (Specify Type)	Face Shield	Respiratory Protection (Specify Type)	Hand Protection (Specify type)	Body Protection (Specify Type)	Foot Protection (Specify Type)
Molasses	Safety Glasses	Required when venting well caps	None	Rubber or Nitrile	Plastic Apron Optional	Steel-Toed Boots
Whey	Safety Glasses	Required when venting well caps	3M #8233 HEPA Dust Mask if dusting problem	Rubber or Nitrile	Plastic Apron Optional	Steel-Toed Boots
Corn Syrup[1]	Safety Glasses	Required when venting well caps	None	Rubber or Nitrile	Plastic Apron Optional	Steel-Toed Boots
Vegetable Oil[1]	Safety Glasses	Required when venting well caps	None	Rubber or Nitrile	Plastic Apron Optional	Steel-Toed Boots
Methanol	Safety Goggles	Required when venting well caps	Consult Regional HSO	Rubber or Neoprene	Rubber or Plastic Apron Required	Steel-Toed Boots
HRC®	Safety Goggles	Required when venting well caps	None	Rubber or Vinyl	Rubber or Vinyl Apron Required	Steel-Toed Boots

Attachment 1. Safe Towing Checklist – Injection Trailer

- ☐ Inspect hitch components for cracking or broken welds
- ☐ Coupler is properly seated on the ball
- ☐ Coupler is locked and secured with safety bolt
- ☐ Inspect and connect safety chains – cross the chains
- ☐ Inspect and connect light/brake electrical connector – make sure electric brake indicator is on inside of truck
- ☐ Verify that break away cable is securely attached
- ☐ Test the lights – both parking and emergency hazard lights
- ☐ Connect the stabilizer bars
- ☐ Confirm that tongue jack is raised
- ☐ Confirm that all jack stands are raised
- ☐ Check tire treads and pressure (rec. pressure is 45-50 psi)
- ☐ Check wheel bearings – shake tires to verify bearing tightness (movement should be less than ¼ inch)
- ☐ Check spare tire treads and pressure
- ☐ Check that truck and trailer are level – no excessive tongue weight and/or weight in back of truck
- ☐ Confirm that back gate is properly secured
- ☐ Make sure all cargo is secured
- ☐ Confirm that tanks are empty
- ☐ Test brakes before hitting the road

F-25

Down-Hole Groundwater Field Parameter Measurement

ARCADIS
Infrastructure, environment, buildings

Imagine the result

Down-Hole Groundwater Field Parameter Measurement

Rev. #: 0

Rev Date: March 10, 2009

I. Scope and Application

This SOP provides procedures for collecting down-hole measurements of standard groundwater quality parameters such as pH, temperature, electrical conductivity, and dissolved oxygen and other parameters in wells or piezometers. The measurements are obtained with a portable field meter that can be lowered into the well on a cable. The data are shown visually on a hand-held display, and may be periodically saved into memory (i.e., data-logging) for later retrieval.

II. Personnel Qualifications

ARCADIS personnel directing, supervising, or leading groundwater sample collection activities should have a minimum of 1 years of previous groundwater sampling experience. ARCADIS personnel providing assistance to groundwater sample collection and associated activities should have a minimum of 6 months of related experience or an advanced degree in environmental sciences, engineering, hydrogeology, or geology.

Prior to mobilizing to the field, the groundwater sampling team should review and be thoroughly familiar with relevant site-specific documents, including but not limited to the project work plan, Field Sampling Plan (FSP), Quality Assurance Project Plan (QAPP), Health and Safety Plan (HASP), and pertinent historical information. Additionally, the groundwater sampling team should review and be thoroughly familiar with documentation provided by equipment manufacturers for all equipment that will be used in the field prior to mobilization.

III. Equipment List

The following materials (or equivalent) shall be available for collecting down-hole measurements of standard groundwater quality parameters at monitoring and remediation wells:

- Health and safety equipment (as required in the site-specific HASP).
- Site plan, well construction records, prior groundwater sampling records (if available).
- Portable groundwater quality meter suitable for lowering into a well. See Table 1 for list of suitable meters and capabilities.
- Water-level probe (e.g., Solinist Model 101 or equivalent).

- Cleaning equipment for decontamination, including containers and solutions, as specified in the FSP.

- Field logbook, groundwater sampling logs, and/or personal digital assistant (PDA) (as specified in the FSP).

The maintenance requirements for the above equipment generally involve decontamination or periodic cleaning, battery charging, and proper storage, as specified by the manufacturer. For operational difficulties, the equipment will be serviced by a qualified technician.

IV. Cautions

Groundwater quality meters should not be allowed to contact non-aqueous phase liquids (NAPLs). Do not perform measurements with a down-hole meter at wells where light non-aqueous phase liquids (LNAPLs) is present, or lower the instrument into DNAPL (if present) at the bottom of the well.

V. Health and Safety Considerations

Use caution when removing well caps, as the well may be under pressure. The well cap may dislodge forcefully and cause injury.

Use caution when opening the protective casing on stickup wells, as wasps frequently nest inside the casing. Also watch for fire ant mounds near well pads when sampling in the south or western U.S.

There is a potential pinch-point at the top of a well riser and casing when instruments are being lowered into wells. Fingers could become caught between the instrument, cable, and well casing.

If thunder or lighting is present, discontinue sampling and take cover until 30 minutes have passed after the last occurrence of thunder or lighting.

VI. Procedure

1. Don appropriate PPE as required by the HASP.

2. Calibrate the field meter prior to the commencement of the day's activities or according to manufacturer's specifications. Record calibration activities in the field logbook and include at a minimum (where applicable):

- name of field meter calibrated
- field meter serial/ID number
- frequency of calibration
- date of calibration
- results of calibration
- name of person performing calibration
- identification and serial number of calibration fluid(s)

3. Record the site name, well identification, date and time of measurement, weather, absence/presence of odors, and other conditions in the field logbook, groundwater sampling logs, and/or PDA.

4. Prepare the work area and open the well.

5. Record the well diameter, total depth, screened interval, and stickup height from the well construction details. Confirm the well diameter and stickup height.

6. Measure and record the depth to water and total well/piezometer depth. Compare current total depth measurement to previous total depth and/or the total depth from the well construction details. If total depth has decreased, note and record the thickness of apparent silt/sediment accumulation.

7. The target depth of measurements is at the midpoint of the well screen or open interval, taking siltation into account as necessary. If additional information is sought regarding vertical stratification of water quality, then measurements can be obtained at other depths.

8. Steadily and carefully lower the field meter to the target depth. Try to avoid creating turbulence in the water column while the field meter is being lowered.

9. If the cable is marked in length units (e.g., feet, meters), monitor the depth of the instrument as it is lowered using the cable markings. If the cable is not marked, pre-measure the length of cable needed to reach the target depth with a measuring tape or water-level indicator cable. When referencing the depth based on the top of the riser, make sure to add the stickup height of the well riser (above ground surface) to the depth of the target depth below grade. (I.e., if

the target depth is 50 feet and the stickup is 1.5 feet above grade, the cable will read 51.5 feet when the probe is at the target depth).

10. When the field meter reaches the target depth, secure the cable so that the field meter does not move from the target depth.

11. Display the water quality data according to the manufacturer's instructions.

12. Monitor and record the water quality parameters every two minutes for a maximum of ten minutes. The monitoring period can be shorter if the field parameters meet the following stabilization criteria over three consecutive readings:

    - turbidity values (if monitored) remains within 10% (or within 1 NTU if the turbidity reading is less than 10 NTU)
    - specific conductance and temperature values remain within 3%
    - pH remains within ±0.1 unit

13. If dissolved oxygen values are above the acceptable range for the temperature of groundwater (Table 2), then slowly raise and lower the meter in an effort to remove air bubbles that may be entrained on the probe. If the dissolved oxygen value is 0.00 or less, then the meter should be serviced and re-calibrated.

14. Slowly remove the cable and field meter from the well.

15. Secure the well and properly dispose of personal protective equipment (PPE) and disposable equipment as specified in the FSP.

16. Complete decontamination procedures for the cable and field meter, as appropriate.

17. At the completion of the day's activities, perform a final calibration check of field instruments and record results.

VII. Waste Management

Materials generated during groundwater sampling activities, including disposable equipment, will be placed in appropriate containers. Containerized waste will be disposed of by the client consistent with the procedures identified in the FSP.

VIII. Data Recording and Management

Field notes from the field logbook or the groundwater sampling logs will be transmitted to the ARCADIS PM at the end of each day, unless otherwise directed by the PM. The groundwater team leader retains copies of the groundwater sampling notes and/or logs.

IX. Quality Assurance

The following quality control procedures should be observed in the field:

- Operate all monitoring instrumentation in accordance with manufacturer's instructions and calibration procedures. Calibrate instruments at the beginning of each day and verify the calibration at the end of each day. Record all calibration activities in the field notebook as detailed above.

- Clean all groundwater sampling equipment prior to use in the first well and after each subsequent well using procedure for equipment decontamination as specified in the FSP.

X. References

Vesilind, P.A., Introduction to Environmental Engineering, PWS Publishing Company, Boston, 468 pages (1996).

Table 1

Down-Hole Water Quality Meters

Meter	Water Quality Parameter Measurement Capability								Minimum Well Diameter (in)	Maximum Depth (feet)	Data Logging
	pH	Temp	EC	DO	ORP	Turb	TDS	Salinity			
Horiba U-22	X	X	X	X	X	X	X	X	2	320	YES
YSI 556 MPS	X	X	X	X	X				2	65	YES
YSI 600XL Sonde	X	X	X	X	X				2	200	YES
YSI 6920 V2 Sonde	X	X	X	X	X	X		X	3	200	YES
HydroLab Quanta G	X	X	X	X	X			X	2	320	NO
Hanna Instruments 9828	X	X	X	X	X				2	320	YES
In-Situ Troll 9500	X	X	X	X	X	X	X	X	2	300	YES

Note: T = temperature, EC = electrical conductivity (aka “specific conductance”), DO = dissolved oxygen, ORP = oxygen-reduction potential, Turb = turbidity, TDS = total dissolved solids

Table 2

Oxygen Solubility in Fresh Water

Temperature (degrees C)	**Dissolved Oxygen** (mg/L)
0	14.6
1	14.19
2	13.81
3	13.44
4	13.09
5	12.75
6	12.43
7	12.12
8	11.83
9	11.55
10	11.27
11	11.01
12	10.76
13	10.52
14	10.29
15	10.07
16	9.85
17	9.65
18	9.45
19	9.26
20	9.07
21	8.9
22	8.72
23	8.56
24	8.4
25	8.24
26	8.09
27	7.95
28	7.81
29	7.67
30	7.54
31	7.41
32	7.28
33	7.16
34	7.05
35	6.93

Reference: Vesilind, P.A., *Introduction to Environmental Engineering*, PWS Publishing Company, Boston, 468 pages (1996).

F-26

Field Equipment Decontamination

ARCADIS
Infrastructure, environment, facilities

Imagine the result

Field Equipment Decontamination

Rev. #: 3

Rev Date: April 26, 2010

I. Scope and Application

Equipment decontamination is performed to ensure that sampling equipment that contacts a sample, or monitoring equipment that is brought into contact with environmental media to be sampled, is free from analytes of interest and/or constituents that would interfere with laboratory analysis for analytes of interest. Equipment must be cleaned prior to use for sampling or contact with environmental media to be sampled, and prior to shipment or storage. The effectiveness of the decontamination procedure should be verified by collecting and analyzing equipment blank samples.

The equipment cleaning procedures described herein includes pre-field, in the field, and post-field cleaning of sampling tools which will be conducted at an established equipment decontamination area (EDA) on site (as appropriate). Equipment that may require decontamination at a given site includes: soil sampling tools; groundwater, sediment, and surface-water sampling devices; water testing instruments; down-hole instruments; and other activity-specific sampling equipment. Non-disposable equipment will be cleaned before collecting each sample, between sampling events, and prior to leaving the site. Cleaning procedures for sampling equipment will be monitored by collecting equipment blank samples as specified in the applicable work plan or field sampling plan. Dedicated and/or disposable (not to be re-used) sampling equipment will not require decontamination.

II. Personnel Qualifications

ARCADIS field sampling personnel will have current health and safety training, including 40-hour HAZWOPER training, site supervisor training, and site-specific training, as needed. In addition, ARCADIS field sampling personnel will be versed in the relevant SOPs and possess the skills and experience necessary to successfully complete the desired fieldwork. The project HASP and other documents will identify any other training requirements such as site specific safety training or access control requirements.

III. Equipment List

- health and safety equipment, as required in the site Health and Safety Plan (HASP)
- distilled water

- Non-phosphate detergent such as Alconox or, if sampling for phosphorus phosphorus-containing compounds, Luminox (or equivalent).
- tap water
- rinsate collection plastic containers
- DOT-approved waste shipping container(s), as specified in the work plan or field sampling plan (if decontamination waste is to be shipped for disposal)
- brushes
- large heavy-duty garbage bags
- spray bottles
- (Optional) – Isoprophyl alcohol (free of ketones) or methanol
- Ziploc-type bags
- plastic sheeting

IV. Cautions

Rinse equipment thoroughly and allow the equipment to dry before re-use or storage to prevent introducing solvent into sample medium. If manual drying of equipment is required, use clean lint-free material to wipe the equipment dry.

Store decontaminated equipment in a clean, dry environment. Do not store near combustion engine exhausts.

If equipment is damaged to the extent that decontamination is uncertain due to cracks or dents, the equipment should not be used and should be discarded or submitted for repair prior to use for sample collection.

A proper shipping determination will be performed by a DOT-trained individual for cleaning materials shipped by ARCADIS.

V. Health and Safety Considerations

Review the material safety data sheets (MSDS) for the cleaning materials used in decontamination. If solvent is used during decontamination, work in a well-ventilated area and stand upwind while applying solvent to equipment. Apply solvent in a manner that minimizes potential for exposure to workers. Follow health and safety procedures outlined in the HASP.

VI. Procedure

A designated area will be established to clean sampling equipment in the field prior to sample collection. Equipment cleaning areas will be set up within or adjacent to the specific work area, but not at a location exposed to combustion engine exhaust. Detergent solutions will be prepared in clean containers for use in equipment decontamination.

Cleaning Sampling Equipment

1. Wash the equipment/pump with potable water.

2. Wash with detergent solution (Alconox, Liquinox or equivalent) to remove all visible particulate matter and any residual oils or grease.

3. If equipment is very dirty, precleaning with a brush and tap water may be necessary.

4. (Optional) – Flush with isopropyl alcohol (free of ketones) or with methanol. This step is optional but should be considered when sampling in highly impacted media such as non-aqueous phase liquids or if equipment blanks from previous sampling events showed the potential for cross contamination of organics.

5. Rinse with distilled/deionized water.

Decontaminating Submersible Pumps

Submersible pumps may be used during well development, groundwater sampling, or other investigative activities. The pumps will be cleaned and flushed before and between uses. This cleaning process will consist of an external detergent solution wash and tap water rinse, a flush of detergent solution through the pump, followed

by a flush of potable water through the pump. Flushing will be accomplished by using an appropriate container filled with detergent solution and another contained filled with potable water. The pump will run long enough to effectively flush the pump housing and hose (unless new, disposable hose is used). Caution should be exercised to avoid contact with the pump casing and water in the container while the pump is running (do not use metal drums or garbage cans) to avoid electric shock. Disconnect the pump from the power source before handling. The pump and hose should be placed on or in clean polyethylene sheeting to avoid contact with the ground surface.

VII. Waste Management

Equipment decontamination rinsate will be managed in conjunction with all other waste produced during the field sampling effort. Waste management procedures are outlined in the work plan or Waste Management Plan (WMP).

VIII. Data Recording and Management

Equipment cleaning and decontamination will be noted in the field notebook. Information will include the type of equipment cleaned, the decontamination location and any deviations from this SOP. Specific factors that should be noted include solvent used (if any), and source of water.

Any unusual field conditions should be noted if there is potential to impact the efficiency of the decontamination or subsequent sample collection.

An inventory of the solvents brought on site and used and removed from the site will be maintained in the files. Records will be maintained for any solvents used in decontamination, including lot number and expiration date.

Containers with decontamination fluids will be labeled.

IX. Quality Assurance

Equipment blanks should be collected to verify that the decontamination procedures are effective in minimizing potential for cross contamination. The equipment blank is prepared by pouring deionized water over the clean and dry tools and collecting the deionized water into appropriate sample containers. Equipment blanks should be analyzed for the same set of parameters that are performed on the field samples collected with the equipment that was cleaned. Equipment blanks are collected per equipment set, which represents all of the tools needed to collect a specific sample.

X. References

USEPA Region 9, Field Sampling Guidance #1230, Sampling Equipment Decontamination.

USEPA Region 1, Low Stress (low flow) Purging and Sampling Procedure for the Collection of Groundwater Samples from Monitoring Wells.

F-27

Investigation-Derived Waste
Handling and Storage

ARCADIS
Infrastructure, environment, buildings

Imagine the result

Investigation-Derived Waste Handling and Storage

Rev. #: 3

Rev Date: February 22, 2013

I. Scope and Application

The objective of this Standard Operating Procedure (SOP) is to describe the procedures to manage investigation-derived wastes (IDW), both hazardous and non-hazardous, generated during site activities, which may include, but are not limited to - drilling, trenching/excavation, construction, demolition, monitoring well sampling, soil sampling, decontamination and remediation. Please note that this SOP is intended for materials that have been deemed a solid waste as defined by 40 CFR § 261.2 (which may includes liquids, solids, and sludges). In some cases, field determinations will be made based on field screening or previous data that materials are not considered a hazardous waste. IDW may include soil, groundwater, drilling fluids, decontamination liquids, personal protective equipment (PPE), sorbent materials, construction and demolition debris, and disposable sampling materials that may have come in contact with potentially impacted materials. IDW will be collected and staged at the point of generation. Quantities small enough to be containerized in 55-gallon drums will be taken to a designated temporary storage area (discussed in further detail under Drum Storage) onsite pending characterization and disposal. Waste materials will be analyzed for constituents of concern to evaluate proper disposal methods. PPE and disposable sampling equipment will be placed in DOT-approved drums prior to disposal and typically does not require laboratory analysis. This SOP describes the necessary equipment, field procedures, materials, regulatory references, and documentation procedures necessary for proper handling and storage of IDW up to the time it is properly disposed. The procedures for handling IDW are based on the United States Environmental Protection Agency's Guide to Management of Investigation Derived Wastes (USEPA, 1992). IDW is assumed to be contaminated with the site constituents of concern (COCs) until analytical evidence indicates otherwise. IDW will be managed to ensure the protection of human health and the environment and will comply with all applicable or relevant and appropriate requirements (ARAR). The following Laws and Regulations on Hazardous Waste Management are potential ARAR for this site.

State Laws and Regulations

- To Be Determined Based on Location of Site and Location of Treatment, Storage, and/or Disposal Facility (TSDF) to be utilized

Federal Laws and Regulations

- Resource Conservation and Recovery Act (RCRA) 42 USC § 6901-6987
- Comprehensive Environmental Response, Compensation and Liability Act (CERCLA) 42 USC § 9601-9675

- Superfund Amendments and Reauthorization Act (SARA)
- Department of Transportation (DOT) Hazardous Materials Transportation

Pending characterization, IDW will be stored appropriately within each area of contamination (AOC). Under RCRA, “storage” is defined as the holding of hazardous waste for a temporary period, at the end of which the hazardous waste is treated, disposed of, or stored elsewhere” (40 CFR § 260.10). The onsite waste staging area will be in a secure and controlled area. Waste characterization can either be based on generator knowledge, such as using materials safety data sheets (MSDS’), or can be based upon analytical results. The laboratory used for waste characterization analysis must have the appropriate state and federal certifications and be approved by ARCADIS and Client. IDW will be classified as RCRA hazardous or non-regulated under RCRA based on the waste characterization.

If IDW is characterized as RCRA hazardous waste, RCRA and DOT requirements must be followed for packaging, labeling, transporting, storing, and record keeping as described in 40 CFR § 262 and 49 CFR § 171-178. Wastes judged to potentially meet the criteria for hazardous wastes shall be stored in DOT approved packaging. Waste material classified as RCRA non-hazardous may be handled and disposed of as an industrial waste.

Liquid wastes judged to potentially meet the criteria for hazardous wastes shall be stored in DOT approved 55 gallon drums or other approved containers that are compatible with the type of material stored therein. Solid materials deemed to potentially meet hazardous criteria will be drummed where practicable. Large quantities of potentially hazardous solid materials must be containerized (such as in a roll-off box) for up to a maximum of 90 or 180 days as described in the Excavated Solids Section. Waste material classified as non-hazardous may be handled and disposed of as an industrial waste and is not subject to the 90-day or 180-day on-site storage limitation.

This is a standard (i.e., typically applicable) operating procedure which may be varied or changed as required, dependent upon site conditions, equipment limitations, or limitations imposed by the procedure. The ultimate procedure employed will be documented in the project work plans or reports. If changes to the sampling procedures are required due to unanticipated field conditions, the changes will be discussed with the Project Manager and Client as soon as practicable and documented in the report.

II. Personnel Qualifications

ARCADIS field sampling personnel will have current health and safety training including 40-hour HAZWOPER training, site supervisor training, site-specific training, first aid, and CPR, as needed. ARCADIS personnel may sign manifests on a case-to-case basis for clients, provided the appropriate agreement is in place between ARCADIS and the client documenting that ARCADIS is not the generator, but is acting as authorized representative for the generator. ARCADIS personnel who sign hazardous waste manifests will have the current DOT hazardous materials transportation training according to 49 CFR § 172.704. ARCADIS field personnel will also comply with client-specific training such as LPS. In addition, ARCADIS field sampling personnel will be versed in the relevant SOPs and posses the required skills and experience necessary to successfully complete the desired field work.

III. Equipment List

The following materials, as required, shall be available for IDW handling and storage:

Appropriate personal protective equipment as specified in the Site Health and Safety Plan

- 55-gallon steel drums, DOT 1A2 or equivalent
- ¾ -inch socket wrench
- Hammer
- Leather gloves
- Drum dolly
- Appropriate drum labels (outdoor waterproof self adhesive)
- Polyethylene storage tank
- Appropriate labeling, packing, chain-of-custody forms, and shipping materials as specified in the *Chain-of-Custody* SOP and *Field Sampling Handling, Packing, and Shipping* SOP.
- Indelible ink and/or permanent marking pens
- Plastic sheeting

- Appropriate sample containers, labels, and forms
- Stainless-steel bucket auger
- Stainless steel spatula or knife
- Stainless steel hand spade
- Stainless steel scoop
- Digital camera
- Field logbook.

IV. Cautions

- Filled drums can be very heavy, always use appropriate moving techniques and equipment.
- Similar media will be stored in the same drums to aid in sample analysis and disposal.
- Drum lids must be secured to prevent rainwater from entering the drums.
- Drums containing solid material may not contain any free liquids.
- Waste containers stored for extended periods of time may be subject to deterioration. Drum over packs may be used as secondary containment.
- All drums must be in good condition to prevent potential leakage and facilitate subsequent disposal. Inspect the drums for dents and rust, and verify the drum has a secure lid prior to use.

V. Health and Safety Considerations

- Appropriate personal protective equipment must be worn by all field personnel within the designated work area.
- Air monitoring may be required during certain field activities as required in the Site Health and Safety Plan.

- If excavating in potentially hazardous areas is possible, contingency plans should be developed to address the potential for encountering gross contamination or non-aqueous phase liquids.

- ARCADIS field personnel will be familiar and compliant with Client-specific health and safety requirements such as Chevron's hand safety policy including the prohibition of fixed and/or folding blade knives.

VI. Procedure

Waste storage and handling procedures to be used depend upon the type of generated waste. For this reason, IDW should be stored in a secure location onsite in separate 55-gallon storage drums, solids can be stockpiled onsite (if non-hazardous), and purge water may be stored in polyethylene tanks. Waste materials such as broken sample bottles or equipment containers and wrappings will be stored in 55-gallon drums unless they were not in contact with sample media.

Management of IDW

Minimization of IDW should be considered by the Project Manager during all phases of the project. Site managers may want to consider techniques such as replacing solvent-based cleaners with aqueous-based cleaners for decontamination of equipment, reuse of equipment (where it can be decontaminated), limitation of traffic between exclusion and support zones, and drilling methods and sampling techniques that generate little waste. Alternative drilling and subsurface sampling methods may include the use of small diameter boreholes, as well as borehole testing methods such as a core penetrometer or direct push technique instead of coring (EPA, 1993).

Drum Storage

Drums containing hazardous waste shall be stored in accordance with the requirements of 40 CFR 265 Subpart I (for containers) and 265 Subpart DD (for containment buildings). All 55-gallon drums will be stored at a secure, centralized on-site location that is readily accessible for vehicular pick-up. Drums confirmed as, or believed to contain hazardous waste will be stored over an impervious surface provided with secondary containment. The storage location will, for drums containing liquid, have a containment system that can contain at least the larger of 10% of the aggregate volume of staged materials or 100% of the volume of the largest container. Drums will be closed during storage and be in good condition in accordance with the Guide to Management of Investigation-Derived Wastes (USEPA, 1992).

Hazardous Waste Determination

Waste material must be characterized to determine if it meets any of the federal definitions of hazardous waste as required by 40 CFR § 262.11. If the waste does not meet any of the federal definitions, it must then be established if any state-specific hazardous waste criteria exist/apply.

Generator Status

Once hazardous waste determination has been made, the generator status will be determined. Large quantity generators (LQG) are generators who generate more than 1,000 kilograms of hazardous waste in a calendar month. Small quantity generators (SQG) of hazardous waste are generators who generate greater than 100 kilograms but less than 1,000 kilograms of hazardous waste in a calendar month. Conditionally exempt small quantity generators (CESQG) are generators who generate less than 100 kilograms of hazardous waste per month. Please note that a generator status may change from month to month and that a notice of this change is usually required by the generator's state agency.

Accumulation Time for Hazardous Waste

A LQG may accumulate hazardous waste on site for 90 days or less without a permit and without having interim status provided that such accumulation is in compliance with specifications in 40 CFR § 262.34. A SQG may accumulate hazardous waste on site for 180 days or less without a permit or without having interim status subject to the requirements of 40 CFR § 262.34(d). CESQG requirements are found in 40 CFR § 261.5. **NOTE**: The CESQG and SQG provisions of 40 CFR § 261.5, 262.20(e), 262.42(b) and 262.44 may not be recognized by some states (e.g. Rhode Island). **State-specific regulations must be reviewed and understood prior to the generation of hazardous waste.**

<u>Satellite Accumulation of Hazardous Waste</u>

Satellite accumulation (SAA) shall mean the accumulation of as much as fifty-five (55) gallons of hazardous waste, or the accumulation of as much as one quart of acutely hazardous waste, in containers at or near any point of generation where the waste initially accumulates, which is under the control of the operator of the process generating the waste, without a permit or interim status and without complying with the requirements of 40 CFR § 262.34(a) and without any storage time limit, provided that the generator complies with 40 CFR § 262.34(c)(1)(i).

Once more than 55 gallons of hazardous waste accumulates in SAA, the generator has three days to move this waste into storage.

Storage recommendations for hazardous waste include:

- Ignitable Hazardous wastes must be >50 feet from the property line per 40 CFR § 265.176 (LQG generators only).
- Hazardous waste must be stored on a concrete slab (asphalt is acceptable if there are no free liquids in the waste) per 40 CFR § 265.176.
- Drainage must be directed away from the accumulation area.
- Area must be properly vented.
- Area must be secure.

Drum/Container Labeling

Drums will be labeled on both the side and lid of the drum using a permanent marking pen. Old drum labels must be removed to the extent possible, descriptions crossed out should any information remain, and new labels affixed on top of the old labels. Other containers used to store various types of waste (polyethylene tanks, roll-off boxes, end-dump trailers, etc.) will be labeled with an appropriate "Waste Container" or “Testing in Progress” label pending characterization. Drums and containers will be labeled as follows:

- Appropriate waste characterization label (Testing In Progress, Hazardous, or Non-Hazardous)
- Waste generator's name (e.g., client name)
- Project name
- Name and telephone number of ARCADIS project manager
- Composition of contents (e.g., used oil, acetone 40%, toluene 60%)
- Media (e.g., solid, liquid)
- Accumulation start date
- Drum number of total drums as reconciled with the Drum Inventory maintained in the field log book.

IDW containers will remain closed except when adding or removing waste. Immediately upon beginning to place waste into the drum/container, a “Waste Container” or “Testing in Progress” label will be filled out to include the information specified above, and affixed to the container. Once the contents of the container are identified as either non-hazardous or hazardous, the following additional labels will be applied. Containers with waste determined to be non-hazardous will be labeled with a green and white "Non-Hazardous Waste" label over the "Waste Container" label. Containers with waste determined to be hazardous will be stored in an onsite storage area and will be labeled with the "Hazardous Waste" label and affixed over the "Waste Container" label. The ACCUMULATION DATE for the hazardous waste is the date the waste is first placed in the container and is the same date as the date on the "Waste Container" label. DOT hazardous class labels must be applied to all hazardous waste containers for shipment offsite to an approved disposal or recycling facility. In addition a DOT proper shipping name shall be included on the hazardous waste label. The transporter should be equipped with the appropriate DOT placards. However, placarding or offering placards to the initial transporter is the responsibility of the generator per 40 CFR § 262.33.

Inspections and Documentation

All IDW will be documented as generated on a Drum Inventory Log maintained in the field log book. The Drum Inventory will record the generation date, type, quantity, matrix and origin (e.g. Boring-1, Test Pit 3, etc) of materials in every drum, as well as a unique identification number for each drum. The drum inventory will be used during drum pickup to assist with labeling of drums. The drum storage area and any other areas of temporarily staged waste, such as soil/debris piles, will be inspected weekly. The weekly inspections will be recorded in the field notebook or on a Weekly Inspection Log. Digital photographs will be taken upon the initial generation and drumming/staging of waste, and final labeling after characterization to document compliance with labeling and storage protocols, and condition of the container. Evidence of damage, tampering or other discrepancy should be documented photographically.

Emergency Response and Notifications

Specific procedures for responding to site emergencies will be detailed in the HASP. If the generator is designated as a LQG, a Contingency Plan will need to be prepared to include emergency response and notification procedures per 40 CFR § 265 Subpart D. In the event of a fire, explosion, or other release which could threaten human health outside of the site or when Client or ARCADIS has knowledge of a spill that has reached surface water, Client or ARCADIS must immediately notify the National Response Center (800-424-8802) in accordance with 40 CFR § 262.34. Other notifications to state agencies may also be necessary.

Drilling Soil Cuttings and Muds

Soil cuttings are solid to semi-solid soils generated during trenching activities, subsurface soil sampling, or installation of monitoring wells. Depending on the drilling method, drilling fluids known as "muds" may be used to remove soil cuttings. Drilling fluids flushed from the borehole must be directed into a settling section of a mud pit. This allows reuse of the decanted fluids after removal of the settled sediments. Soil cuttings will be labeled and stored in 55-gallon drums with bolt-sealed lids.

Excavated Solids

Excavated solids may include, but are not limited to soil, fill and construction and demolition debris. Excavated solids may be temporarily stockpiled onsite as long as the material is a RCRA non-hazardous waste and the solids will be treated onsite pursuant to a certified, authorized, or permitted treatment method, or properly disposed off-site. Stockpiled materials characterized as hazardous must be immediately containerized and removed from the site within 90 days of generation (except for soils using satellite accumulation). Excavated solids should be stockpiled and maintained in a secure area onsite. At a minimum, the floor of the stockpile area will be covered with a 20-mil high density polyethylene liner that is supported by a foundation or at least a 60-mil high density polyethylene liner that is not supported by a foundation. The excavated material will not contain free liquids. The owner/operator will provide controls for windblown dispersion, run-on control, and precipitation runoff. The run-on control system will prevent flow onto the active portion of the pile during peak discharge from at least a 25-year storm and the run-off management system will collect and control at least the water volume resulting from a 24-hour, 25-year storm (EPA, 1992). Additionally, the stockpile area will be inspected on a weekly basis and after storm events. Individual states may require that the stockpile be inspected/certified by a licensed professional engineer. Stockpiled material will be covered with a 6-mil polyvinyl chloride (PVC) liner. The stockpile cover will be secured in place with appropriate material (concrete blocks, weights, etc.) to prevent the movement of the cover. Excavated solids may also be placed in roll off containers and covered with a 6-mil PVC liner pending results for waste characterization.

Decontamination Solutions

Decontamination solutions are generated during the decontamination of personal protective equipment and sampling equipment. Decontamination solutions may range from detergents, organic solvents and acids used to decontaminate small field sampling equipment to steam cleaning rinsate used to wash heavy field equipment. These solutions are to be labeled and stored in 55-gallon drums with bolt-sealed lids.

Disposable Equipment

Disposable equipment includes personal protective equipment (tyvek coveralls, gloves, booties and APR cartridges) and disposable sampling equipment such as trowels or disposable bailers. If the media sampled exhibits hazardous characteristics per results of waste characterization sampling, disposable equipment will also be disposed of as a hazardous waste. These materials will be stored onsite in labeled 55-gallon drums pending analytical results for waste characterization.

Purge Water

Purge water includes groundwater generated during well development, groundwater sampling, or aquifer testing. The volume of groundwater generated will dictate the appropriate storage procedure. Monitoring well development and groundwater sampling may generate three well volumes of groundwater or more. This volume will be stored in labeled 55-gallon drums. Aquifer tests may generate significantly greater volumes of groundwater depending on the well yield and the duration of the test. Therefore, large-volume portable polyethylene tanks will be considered for temporary storage pending groundwater-waste characterization.

Purged Water Storage Tank Decontamination and Removal

The following procedures will be used for inspection, cleaning, and offsite removal of storage tanks used for temporary storage of purge water. These procedures are intended to be used for rented portable tanks such as Baker Tanks or Rain for Rent containers. Storage tanks will be made of inert polyethylene materials.

The major steps for preparing a rented tank for return to a vendor include characterizing the purge water, disposing of the purge water, decontaminating the tank, final tank inspection, and mobilization. Decontamination and inspection procedures are describe in further detail below.

- Tank Cleaning: Most vendors require that tanks be free of any sediment and water before returning, a professional cleaning service may be required. Each specific vendor should be consulted concerning specific requirements for returning tanks.

- Tank Inspection: After emptying the tank, purged water storage tanks should be inspected for debris, chemical staining, and physical damage. The vendors require that tanks be returned in the original condition (i.e., free of sediment, staining and no physical damage).

VII. Waste Characterization Sampling and Shipping

Soil/Solids Characterization

Waste characterization will be conducted in accordance with waste hauler, waste handling facility, and state/federal requirements. In general, RCRA hazardous wastes are those solid wastes determined by a Toxicity Characteristic Leaching Procedure (TCLP) test or to contain levels of certain toxic metals, pesticides, or other organic chemicals above specific federally regulated thresholds. If the one or more of 40 toxic compounds listed in Table I of 40 CFR § 261.24 are detected in the sample at levels above the maximum unregulated concentrations, the waste must be characterized as a toxic hazardous waste. Wastes can also be considered “listed” hazardous waste depending on site-specific processes.

Composite soil samples will be collected at a frequency of one sample per 10 cubic yard basis for stockpiled soil or one per 55-gallon drum for containerized waste. A four point composite sample will be collected per 10 cubic yards of stockpiled material and for each drum. Sample and composite frequencies may be adjusted in accordance with the waste handling facility’s requirements. Composite Waste characterization samples may be analyzed for TCLP semi-volatile organic compounds (SVOCs), TCLP RCRA metals, and polychlorinated biphenyls, as well as corrosivity (pH), reactivity and flammability (flashpoint). Additional samples may be collected and analyzed by the laboratory on a contingency basis. Composite soil samples will not be collected for volatile organic compound (VOC) analyses. Discrete sampling techniques will be used for VOC analyses to prevent the loss of VOCs.

Wastewater Characterization

Waste characterization will be conducted in accordance with the requirements of the waste hauler, waste handling facility, and state/federal governments. In general, purge water should be analyzed by methods appropriate for the known contaminants, if any, that have been historically detected in the monitoring wells. Samples will be collected and analyzed in accordance with the requirements of the waste disposal facility.

Wastewater characterization samples may be analyzed for TCLP volatile organic compounds (VOCs), TCLP semi-volatile organic compounds (SVOCs), TCLP RCRA metals, and polychlorinated biphenyls, as well as corrosivity (pH), reactivity and flammability (flashpoint). Additional samples may be collected and analyzed by the laboratory on a contingency basis.

Sample Handling and Shipping

All samples will be appropriately labeled, packed, and shipped, and the chain-of-custody will be filled out in accordance with the Chain-of-Custody SOP and Field Sampling Handling, Packing, and Shipping SOP and Hazardous Materials Packaging and Shipping SOP.

It should be noted that additional training is required for packaging and shipping of hazardous and/or dangerous materials. Please reference the following ARCADIS intranet team page for more information: http://team/sites/hazmat/default.aspx.

Preparing Waste Shipment Documentation (Hazardous and Non-Hazardous)

Waste profiles will be prepared by the ARCADIS PM and forwarded, along with laboratory analytical data to the Client PM for approval/signature. The Client PM will then return the profile to ARCADIS who will then forward to the waste removal contractor for preparation of a manifest. The manifest will be reviewed by ARCADIS prior to forwarding to the Client PM for approval. Upon approval of the manifest, the Client PM will return the original signed manifest directly to the waste contractor or to the ARCADIS PM for forwarding to the waste contractor.

Final drum labeling and pickup will be supervised by an ARCADIS representative who is experienced with waste labeling procedures. The ARCADIS representative will have a copy of the drum inventory maintained in the field book and will reconcile the drum inventory with the profile numbers on the labels and on the manifest. Different profile numbers will be generated for different matrices or materials in the drums. For example, the profile number for drill cuttings will be different than the profile number for purge water. **When there are multiple profiles it is critical that the proper label, with the profile number appropriate to a specific material be affixed to the proper drums.** A copy of the ARCADIS drum inventory will be provided to the waste transporter during drum pickup and to the facility receiving the waste.

VIII. Data Recording and Management

Waste characterization sample handling, packing, and shipping procedures will be documented in accordance with the *Quality Assurance Project Plan*, if one exists. Copies of the chains-of-custody forms will be maintained in the project file.

Following waste characterization, IDW containers will be re-labeled with the appropriate waste hazardous or non-hazardous waste labels and the client will initiate disposal at the appropriate waste disposal facility.

IX. Quality Assurance

The chain-of-custody and sample labels for waste characterization samples will be filled out in accordance with the *Quality Assurance Project Plan*.

X. References

United States Environmental Protection Agency (USEPA). 1992. Guide to Management of Investigation-Derived Wastes. Office of Remedial and Emergency Response. Hazardous Site Control Division. January 1992.

USEPA. 1991. *Guide to Discharging CERCLA Aqueous Wastes to Publicly Owned Treatment Works (POTWs)*. Office of Remedial and Emergency Response. Hazardous Site Control Division 0S-220W. March 1991.

F-28

Disposal Procedure for ISCO-Derived Solid and Liquid Wastes

ARCADIS

Infrastructure · Water · Environment · Buildings

Imagine the result

Disposal Procedure for ISCO Derived Solid and Liquid Wastes

Rev. No.2

Rev Date: 19th April 2012

I. Scope and Application

During the initial planning process for an *In Situ* Chemical Oxidation (ISCO) pilot/full scale remediation program, an additional parameter that has to be considered is management of the waste streams produced during the event.

The typical waste streams that are associated with a standard ISCO project site will typically include the following, and need to be stored and disposed of correctly:

Solid Waste

- Used reagent packaging
  - Oxidizers: Sodium persulfate, sodium or potassium permanganate, etc.
  - Activators: Ferrous sulfate heptahydrate, citric acid, sodium hydroxide, hydrogen peroxide
- Used PPE
  - Chemical protective suits
  - Nitrile or other chemically-compatible gloves
- Water Sampling Kit
  - Tubing
  - Bailers
  - String
- Field test kits
  - Test kit bottles or vials
- Spill kit
  - Chemical absorbent spill pads
  - Chemical absorbent booms
- Decontamination
  - Paper towel wipes

Liquid Waste

- Liquid samples
  - Concentrated samples taken from injection wells and/or mixing vessels
  - Less concentrated samples taken from monitoring wells
- Field test kit solution
  - Solution gathered for analysis
  - Solution from on site test kits
- Purged groundwater
- Decontamination solution

- Spilled and excess solution - any excess leaked/spilled/left over solution that cannot be reused onsite

During the injection, solid and liquid waste should be segregated and disposed of properly.

II. CONTAINER TYPE

Due to the nature of the reagent (oxidizer) the type of material used for storage and containment needs to be considered. Storage drums for waste solid and liquid oxidant should be made from plastic or other chemically compatible material. Steel drums can react with any remaining oxidant in solution. Plastic drums will need to be specifically requested from the waste disposal company as typically they supply steel.

III. DEFINITION OF "RCRA" EMPTY

The Resource Conservation and Recovery Act (RCRA) exempts containers that have been contaminated with hazardous waste as long as the container is determined to be "RCRA" empty. 40 Code of Federal Regulations (CFR) 261.7(b)(1) considers a container or an inner liner removed from a container that has held **any** hazardous waste "RCRA" empty if:

> *(i) All wastes have been removed that can be removed using the practices commonly employed to remove materials from that type of container, e.g., pouring, pumping, and aspirating, **and***
>
> *(ii) No more than 2.5 centimeters (one inch) of residue remain on the bottom of the container or inner liner, **or***
>
> *(iii)(A) No more than 3 percent by weight of the total capacity of the container remains in the container or inner liner if the container is less than or equal to 119 gallons in size; **or***
>
> *(B) No more than 0.3 percent by weight of the total capacity of the container remains in the container or inner liner if the container is greater than 119 gallons in size.*

40 Code of Federal Regulations (CFR) 261.7(b)(3) considers a container or an inner liner removed from a container that has held an **acute** hazardous waste "RCRA" empty if:

> *(i) The container or inner liner has been triple rinsed using a solvent capable of removing the commercial chemical product or manufacturing chemical intermediate;*

(ii) The container or inner liner has been cleaned by another method that has been shown in the scientific literature, or by tests conducted by the generator, to achieve equivalent removal; or

(iii) In the case of a container, the inner liner that prevented contact of the commercial chemical product or manufacturing chemical intermediate with the container, has been removed.

It should be noted that typical oxidizers and activators listed above are NOT considered acute hazardous waste.

Prior to the start of a project, staff should review state-specific waste regulations. State environmental regulations may be stricter than federal RCRA regulations regarding the definition of empty. For example, California has specific additional requirements for "contaminated" containers. The requirements include additional descriptions which are stricter than federal requirements such as:

Following material removal, the top, bottom and sidewalls of such a container shall not contain remaining adhered or crusted material resulting from buildup of successive layers of material or a mass of solidified material. A thin uniform layer or dried material or powder is considered acceptable.

In order to minimize hazardous waste, every effort should be made to ensure that containers are considered "RCRA" empty. The following sections apply if containers CANNOT be considered "RCRA" empty.

IV. SOLID WASTE (IF NOT "RCRA" EMPTY)

Example: Spilled oxidant that has become contaminated and any materials that have potential residual oxidant remaining on or in them. Keep wet and dry items separate where possible. Take the following steps:

1 - solid oxidant waste bag should be collected
2 - placed in heavy duty plastic trash bags
3 - securely tied
4 - placed in a designated hazardous waste disposal drum
5 - the drum lid firmly secured

All potentially oxidant-impacted solid waste (used reagent bags, chemical suits etc) must be disposed of as hazardous waste.

The drum then needs to be labeled appropriately as hazardous waste and positioned in a visible location, an example is presented below:

HAZARDOUS WASTE
STATE AND FEDERAL LAW PROHIBITS IMPROPER DISPOSAL
IF FOUND, CONTACT THE NEAREST POLICE, OR PUBLIC SAFETY AUTHORITY, OR THE U.S. ENVIRONMENTAL PROTECTION AGENCY OR THE CALIFORNIA DEPARTMENT OR TOXIC SUBSTANCES CONTROL.
GENERATOR INFORMATION:
NAME
ADDRESS PHONE
CITY STATE ZIP
EPA IDENTIFICATION NO. / MANIFEST TRACKING NO. /
EPA WASTE NO. CA WASTE NO. ACCUMULATION START DATE
CONTENTS, COMPOSITION:
PHYSICAL STATE: SOLID LIQUID
HAZARDOUS PROPERTIES: FLAMMABLE TOXIC CORROSIVE REACTIVITY OTHER
D.O.T. PROPER SHIPPING NAME AND UN OR NA NO. WITH PREFIX
HANDLE WITH CARE!

Name/Address/Phone: PM / TM / Remediation Engineer

EPA Identification No./Manifest Tracking No.: this will be provided by the waste disposal company (http://www.dtsc.ca.gov/IDManifest/index.cfm)

EPA Waste Number: this will be provided by the waste disposal company (http://www.epa.gov/region9/waste/epanums.html)

State Waste Number: this will be provided by the waste disposal company (http://www.dtsc.ca.gov/IDManifest/ID_Numbers.cfm)

Accumulation Start Date: Start of pilot/full scale remediation program

Contents/Composition: Empty open bags of sodium persulfate, may contain residual powder

Physical State: Solid

Hazardous Properties: Under OTHER write 'Oxidizer'

D.O.T Proper Shipping Name and UN Number: Waste sodium persulfate mixture (UN 1505). The UN classification is found in the Transport Section of the relevant MSDS.

The following compounds also may need to be considered as part of an ISCO remedy and are required to be disposed of as hazardous waste:

- Sodium hydroxide (UN 1823) (RCRA designated)

The following compounds can be included with residual hazardous wastes for disposal. On their own they are not classified as hazardous compounds and can be disposed of as non-hazardous waste.

- Ferrous Iron Heptahydrate (not under RCRA but may exhibit Hazardous waste characteristics)
- Citric Acid (not under RCRA but may exhibit Hazardous waste characteristics)

It is important to dispose of different chemicals **SEPARATLEY** where possible in designated hazardous waste drums marked up accordingly for the specific compound. All disposal requires a shipping determination to ensure all materials are properly transported for disposal. A waste profile may serve as a Shipping Determination; however, the determination must be prepared by a HazMat #1 trained person or reviewed by a HazMat #1 trained person in the case of a profile prepared by a 3rd party (the following link provides further information on HazMat training and shipping determination http://team/bt/Hazmat/default.aspx).

V. LIQUID WASTE (IF NOT "RCRA" EMPTY)

Example: Liquid waste is typically generated during groundwater sampling, rinsate water from decontaminating equipment, and residual fluids in field sampling kits or liquid reagent containers (e.g., sodium permanganate shipping containers).

Groundwater that has been identified as having residual oxidant and activator can be handled in two ways. Neutralization is the favorable option to removing remaining persulfate from waste water:

1) Neutralizing liquid waste that may contain persulfate using a quenching reagent such as sodium bicarbonate or ascorbic acid.
2) Disposing of the mixed waste containing persulfate as hazardous waste.

If the liquid waste has been designated for Hazardous waste disposal then the following must occur. For example, if sodium persulfate has been activated with iron

and citric acid, then the following compounds should be listed on the hazardous waste label together as:

- Liquid waste
- Listed as "Oxidizing liquid (contains sodium persulfate (1505) / Ferrous Iron Heptahydrate / Citric Acid)"
- And labeled as an oxidizer

All potential oxidant-impacted liquid waste (from groundwater sampling, purging, residuals, etc) should be placed in an appropriately labeled plastic drum. The drum should then be tested for oxidant concentration using a field test kit or visual inspection in the case of residual permanganate. Depending on the concentration of oxidant remaining in the waste solution will determine how the liquid is disposed of.

Note that some compounds will not have UN numbers as they are not regulated for transport. All disposal requires a shipping determination to ensure all materials are properly transported for disposal. A waste profile may serve as a Shipping Determination, however, the determination must be prepared by a HazMat #1 trained person or reviewed by a HazMat #1 trained person in the case of a profile prepared by a 3rd party (the following link provides further information on HazMat training and shipping determination http://team/bt/Hazmat/default.aspx)..

VI. COLLECTION OF DRUMS

Waste drums filled onsite need to be collected within an appropriate timescale. Hence, a set date for collection of the drums should be arranged no later than 5 days post injection event.

Note that RCRA allows for either 90 days (in the case of a Large Quantity Generator) or 180 days (in the case of a Small Quantity Generator) for the waste drums to be stored on site before they are required to be collected. Given the nature of the compounds to be disposed of, collection of waste should be completed as soon as possible.

VII. PERSONNEL PROTECTIVE EQUIPMENT REQUIRED WHEN DEALING WITH WASTE MATERIALS

Waste generated during an ISCO event should be dealt with as the project progresses, for example, during the reagent mixing process the used bags of sodium persulfate should be emptied as much as possible and the bags folded, placed in a trash bag and tied tightly. This process will be conducted when the operator is wearing

the appropriate PPE (respirator in addition to the standard PPE) and dealing with the used open bags will minimize any further risk of exposure from particulates.

Waste materials and waste solution generated during an ISCO event has the potential to have residual oxidizer on or in it, and hence the appropriate PPE needs to be worn when handling the wastes.

Appropriate PPE will include the following:

- Chemical resistant suit (hood up)
- Chemical resistant boots
- Nitrile gloves (elbow length gloves if deemed necessary)
- Hard hat and full-face visor (in the down position)
- Safety goggles
- Respirator and appropriate filters to be worn if moving used bags of persulfate to waste

The same emergency procedures apply to the handling of waste as operating an ISCO injection event as the same dangers are present in both cases. Hence, the appropriate emergency spill kit will need to be on hand and emergency decontamination area setup and ready for use.

<u>Emergency spill equipment includes the following:</u>

- Brush
- Dust pan
- Trash bag sack/ties/bucket
- Potable water
- Spill pads and booms

<u>Emergency health and safety equipment includes the following:</u>

- Emergency eye wash station
- Emergency shower and potable water supply
- First aid kit

F-29

Utility Locating using Radio Frequency Methods

ARCADIS
Infrastructure, environment, facilities

Imagine the result

Utility Locating using Radio Frequency Methods

Rev. #: 00

Rev Date: November 2010

I. Scope and Application

This reference document outlines the applications, limitations, and methodology associated with the use of Radio Frequency Locators (RFLoc) using Direct Connect or Inductive Signal Transmission Methods to locate underground utilities. RFLoc methods utilize a radio frequency (RF) **transmitter** that sends a radio signal through underground utilities and a **receiver** or "listening" device to detect the same signal that is transmitted on the utility by the transmitter.

RFLoc methods can be useful in locating buried utility lines. The RF signal transmission is most commonly applied either by direct connection or by induction. In the direct-connection method, the signal is applied to an exposed segment of the utility of concern, such as an exposed conduit or segment of pipe, using clamp connectors or a coupling ring. Electrically conductive lines will "carry" or transmit the RF signal which can then be traced using the receiving unit. Examples of conductive lines commonly traced include telephone, electric, and water main utility lines. RFLoc is not effective in locating non-conductive lines, including materials composed of PVC, fiberglass, concrete or clay. In some cases, such as with natural gas supply lines to buildings and homes, the service line is coupled with a tracer wire to which the RF signal may be applied.

RFLoc methods are non-invasive and non-destructive. These tools transmit and receive radio frequency electromagnetic signals. Subsurface objects or material contacts can be located based on differences in their dielectric potential and/or electrical resistivity. Important constraints to consider are depth of penetration, resolution and signal transmission. Higher frequency signals will yield better resolution, but less depth of penetration as compared to a lower frequency signal. Signal transmission can be dampened out or limited by carry-over onto other utilities or lack of a good "connection" due to physical constraints.

II. Personnel Qualifications

Utility locating investigations should be conducted by qualified and experienced operators, such as an experienced field technician and/or geophysicist. The RFLoc operator should be experienced in the use of the instrument and its limitations. The operator should be able to adjust data acquisition procedures in response to variable site conditions in order to identify anomalies and resolve target features. Inexperienced ARCADIS personnel directing or supervising RFLoc investigations have the responsibility to seek appropriate guidance, training and technical peer review from qualified and experienced personnel prior to use.

In accordance with ARCADIS' ***Utility Location Policy and Procedure,* No. ARCHSFS019, Revision 6, January 13, 2009**, field personnel conducting subsurface

work and/or investigation (SWI) activities where above ground or underground utilities are in the vicinity of the work have the responsibility to read, understand, and follow the ***Utility Location Policy and Procedure***. This procedure requires that any ARCADIS personnel assisting in the identification of underground utilities need to have previous related experience of a minimum of 1 year. Those implementing remote sensing technologies must complete training in those techniques and have 6 months experience operating and interpreting results. If utilities cannot be located to eliminate any reasonable concern, field personnel can use their Stop Work authority until utility locations can be identified. Field personnel must review this procedure onsite with ARCADIS subcontractors, and ensure they follow the procedures detailed in this document. Any ARCADIS subcontractor not following the ***Utility Location Policy and Procedures*** will be asked to stop work, and the project manager contacted.

III. Equipment List

The following equipment will be available, as required, during RFLoc utility locating surveys.

- Personal protective equipment (PPE), as required in the site Health and Safety Plan (HASP);
- Appropriate forms, Site plans, field notebook, spray paint and camera;
- RF Cable, Pipe, Utility Locator transmitter and receiver;
- Non-conductive measuring tape; and
- Spare batteries (typically 2 9-volt, and 6 to 8 C or D-sized alkaline).

IV. Cautions

The effectiveness of locating buried utilities is site-specific and subject to the skill level of the operator. Reliability and efficiency is enhanced when used in conjunction with other lines of evidence, including detailed reconnaissance of the area, review of available site plans, and overall understanding of the Site area and types of buried facilities that may be expected at the Site.

Signal interferences can also occur. Facilities that are located in proximity to another facility, overlapping or in layers may appear as one unit. In some cases, segments of lines being traced may have been previously damaged/severed or partially removed and capped, which may cause a loss of signal transmission. Transmission signals can also “jump” from one utility line to another particularly with higher frequencies are used. Signals will generally follow the path of least resistance and in some will deviate

from the line of interest or cause a shadow zone where one or more utilities are located in close proximity.

Also, as noted above, nonmetallic and small diameter utilities are not conducive to locating using RFLoc methods. However, alternative methods can be considered such as tracing a transmitting lead, sonde or “mouse” which can in some cases be snaked into a non-conductive pipe and followed or traced at the surface using the receiving unit.

V. Health and Safety Considerations

Minimize physical hazard exposure through use of proper PPE as prescribed in the HASP. Maintain awareness of other potential hazards associated with the physical location where the RFLoc investigation is being conducted and any ingress or egress conditions. Special care should always be used whenever a direct connection is being made to a buried cable or when applying an induction loop to an exposed wire or cable. Never physically touch or connect to the equipment to exposed wires or cables that may carry electricity. Never connect directly to live or energized power cables.

VI. Procedure

1. Become familiar with the details of the applicability and limitations of RF line locating equipment that has been selected for the project. Most commercially available RFLoc equipment have similar operating functions although operating menus and selections will vary from one make to another. Users must read all operating instructions and become familiar with any instrument prior to using the instrument to locate utilities.

2. Evaluate site-specific utility information to determine suitability of the equipment (e.g., depth, diameter and conductivity of the utilities).

3. Evaluate the Site conditions and select one or more of the potential signal transmission methods for optimal use, including direct connections, transmitter clamp, and/or inductive transmission.

4. **Direct Connection Method** is the most reliable method of signal application. This method is relatively free of interference. The greatest amount of signal strength can be achieved by this method. Low, mid, and high frequency signals may be used. The far end of the utility must be grounded. For most instruments, connect the RED test cord or clamp to an existing ground point or an exposed metallic section of the utility and place the GROUND ROD approximately 10 feet or as far as possible from this point, at an angle of 90º to the buried cable or pipe. Push the GROUND ROD into the ground 8 to 10

inches. Connect the BLACK test cord or clamp to the GROUND ROD. Plug the RED/BLACK test cords into the instrument. Press the FREQUENCY Button to select the desired frequency (e.g. 815 Hz, 8 kHz or 82 kHz, etc.). The Power Output Indicator and the Frequency light of the chosen frequency will light up.

5. **Transmitter Clamp Connection Method:** The transmitter clamp is very easy to use, fits around a pipe or cable and safely applies a signal to a live cable without interrupting or disconnecting the supply. The clamp applies a very discriminating signal to a target line with reduced coupling to other lines. A clamp can sometimes be a more effective method of applying the signal than direct connection. The red/black test cords and ground rod are not needed for this method. Successful coupler operation requires an insulated conductor that is grounded on both near and far ends.

   Put the clamp around the cable and ensure the clamp jaws are closed. It is important to connect the coupler around the cable needing to be traced. Connect the coupler around the wire closer to the outgoing cable not near the system ground. The result will be a stronger signal. By connecting near the grounding, the range will also be shorter, and difficulty may arise when trying to determine one cable from another. Plug the coupler test cord into the instrument and use the manufacture's specified frequency on the receiver and the transmitter. Attempt to trace the utility using the receiving unit.

6. **Inductive Signal Transmission Method:** This method is convenient to use and services are not interrupted. No test cords or connections are needed. The cable or pipe must have good insulation or non-conductive coating, or the operating range will be short. Turn the TRANSMITTER ON. Press the 82 kHz button. Place TRANSMITTER as close as possible to the path of the cable or pipe. Align the TRANSMITTER in line with the cable or pipe. First, locate the broad TRANSMITTER null (zero), and then move toward the expected cable path while looking for the signal carried by the cable. Start tracing the path with the RECEIVER 25 feet from the TRANSMITTER. Locate the cable or pipe, and follow the path. If the signal becomes weak, move the TRANSMITTER to a point 25 feet behind the last strong signal, and continue searching.

7. **Selecting the Tracing Signal Frequency:** The choice of signal frequency (e.g., 815 Hz, 8 kHz or 82 kHz) is dependent on the Site conditions, with each having their advantages. It is recommended to begin by using the lowest available instrument signal frequency (e.g., 815 Hz) and continue as long as you are confident in the results. If the signal is very weak try to adjust the connection or grounding. If there is no improvement in signal then try

increasing the frequency (e.g.,8 kHz). Repeat adjustments of ground and connection point again until switching to the highest frequency (e.g., 82 kHz). A lower frequency signal is usually preferred to the mid-range and high frequency signal, because it is much less susceptible to locating errors caused by nearby cables or pipes.

The lower frequency locating range will also allow for longer line traces than the higher frequency signal and will not travel well through disconnected shield bonds or insulated pipe bushings. The mid-range frequency averages the best of both high and low frequency and is not as susceptible to bleed off or coupling, but it can "jump" from one utility to another. It is still best to use the lower frequency when possible, but the mid-range is commonly used to locate coaxial cable and telecom pairs. The higher frequency is sometimes better for locating sharp corners in cables or pipes. The locating range is quite short for the high frequency signal so the transmitter must be repositioned more often during the tracing operation.

8. **Null and Peak Modes:** Most RFLoc instruments allow the Operator to select between NULL and PEAK modes. PEAK mode provides the most sensitive and accurate mode for location and depth measurement. It provides a sharp peak response with a corresponding small decrease in sensitivity. NULL mode gives a null response when it is directly over the line. The sharp, null response is easier to use than the peak response but is vulnerable to interference and should not be used for locating, except in areas where there is no interference present.

9. **SONDE Transmitter Methods:** A sonde transmitter is a small battery powered signal transmitter that can be inserted into non-metallic ducts, drains or sewers so they can be located and traced with a receiver. A wide range of transmitting sondes is available to suit different applications. Sondes can also be used to pinpoint joints in iron gas pipes, locate blockages in plastic water pipes and monitor the progress of horizontal boring tools. Sondes may be floated along drains at the end of a tether and floats are available for fitting to the sewer sonde and super sonde. Sondes can be strapped to high-pressure water jets or similar devices used for cleaning, maintaining and inspecting drains. Tracing the sonde along the pipe can then be accomplished using the transmitter and following the sonde. Care must be used to ensure the sonde does not become snagged which may prevent its recovery from the pipe.

10. Consider complimentary technologies to supplement RFLoc methods and provide multiple lines of evidence. Technologies may include Ground Penetrating Radar (GPR) magnetic and/or electromagnetic surveys, and air-knifing or vacuum explorations.

11. Employ only qualified and experienced RFLoc operators. For utility locating and mapping applications, the RFLoc operator should be specifically experienced in evaluating data quality and identifying anomalies in the field requiring variations in data acquisition procedures to positively interpret and locate targets of concern.

12. Complete appropriate mark-outs at the Site, such as spray painting traced lines. Consideration of use of paint colors should also be given. Standard colors for utility mark outs include: **RED-Electric: YELLOW-Gas; ORANGE-Communication: BLUE-Water; GREEN-Sewer and Drain; PURPLE-Reclaimed Water; PINK-Temporary Survey Marking; WHITE- Proposed Excavation.**

VII. Waste Management

RFLoc is a non-invasive procedure and should not result in the generation of derived wastes. Any trash or rubbish generated during the course of field activities should be disposed of in a proper trash receptacle.

VIII. Data Recording and Management

Field notes should be taken to include a description of areas surveyed, areas that were not surveyed, interferences, equipment and methods used, location and type of utilities located (if known), photographs, and site sketch. Taped distance measurements should be taken to marked lines relative to existing permanent features for future reference. Project team personnel shall be responsible for maintaining all mark outs for the duration of the project or have the lines remarked if lost due to weather or site activities.

IX. Quality Assurance

The following quality control procedures should be observed:

- Seek appropriate input prior to conducting an RFLoc survey to identify site-specific features that may impact data acquisition.

- Operate all equipment in accordance with manufacturer's instructions and recommended procedures. Record all system component information in the field book.

- Data quality should be checked in the field to identify anomalies that may require adjustment to the data acquisition procedures. Make appropriate

adjustments to data acquisition methods to achieve survey objectives, as feasible.

- It is recommended that the operation and performance of the RFLoc equipment be field checked by locating existing underground utilities or structures of known depth, size, and construction. These characteristics should be similar to that of unidentified target objects.

- Data interpretation should undergo peer review by appropriate qualified and experienced personnel.

X. References

Radiodetection 7000, General Utility and Pipe Locator Operation Manual, July 2008; RYCOM Instruments 8869 Cable, Pipe and Fault Locator User's Manual.

Schonstedt Instrument Company February 2003. A Quick Course on Magnetic, Cable and Pipe Locating.

ARCADIS

Figures

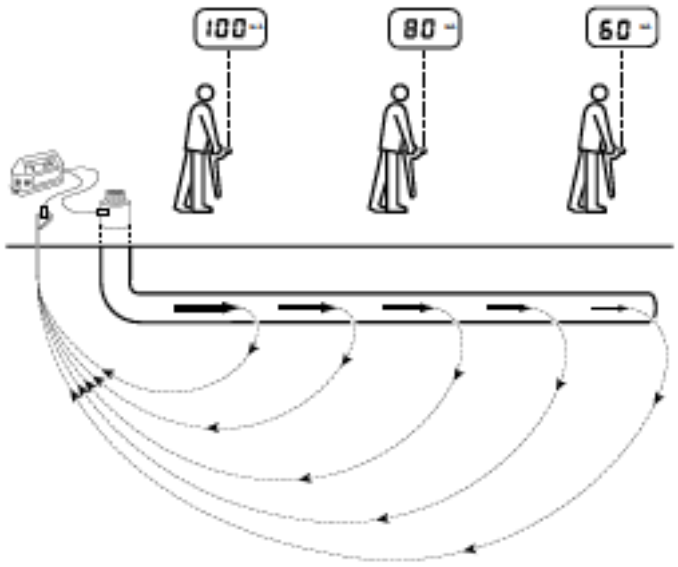

Figure #1

Example of the use of a direct connection signal setup and illustration of the relative normal loss of signal strength with distance away from the transmitting unit.

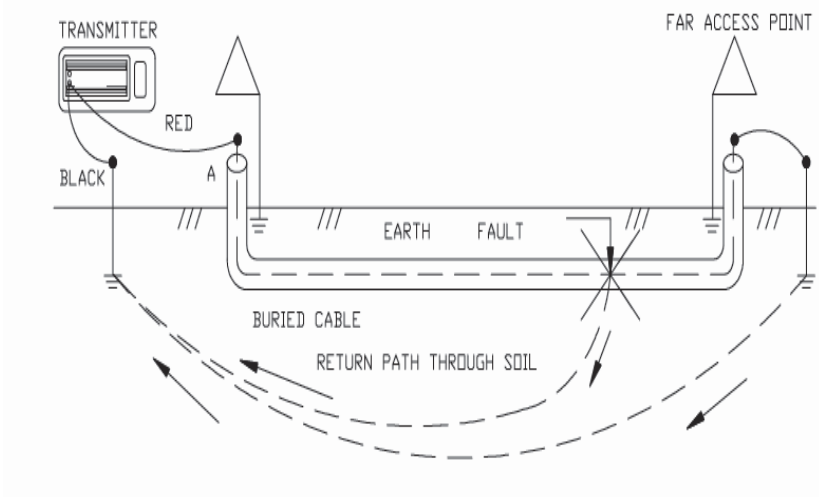

Figure #2

Illustration of signal transmission flow paths through a buried cable with line fault.

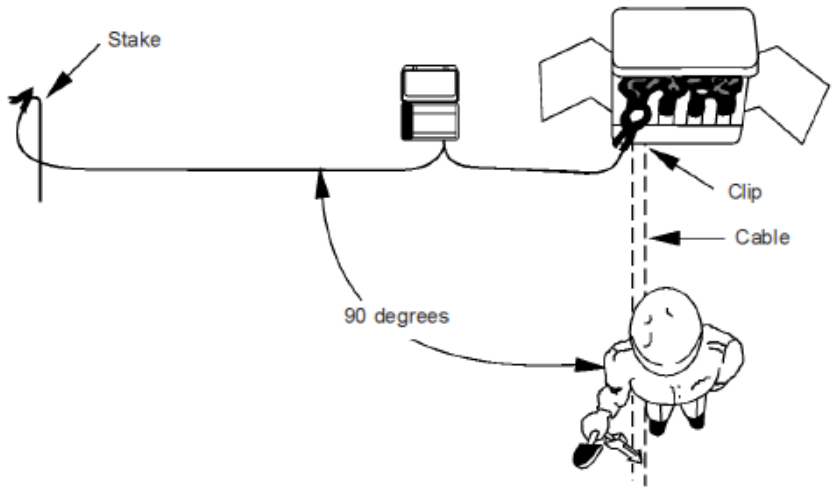

Figure #3

Illustration of the use of the direct connection signal transmission method using clamp.

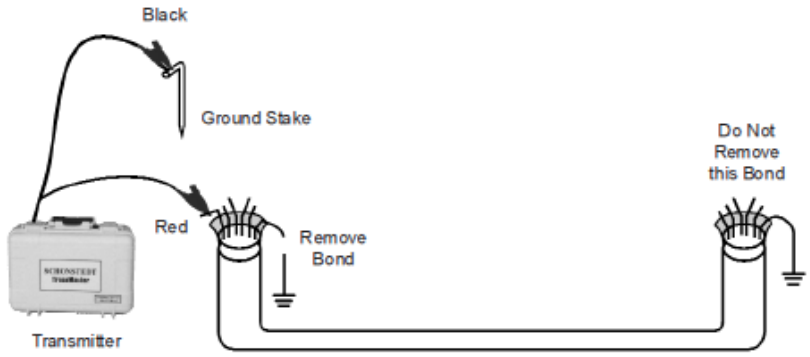

Figure #4

Illustration of the use of the direct connection signal transmission method using cable connectors.

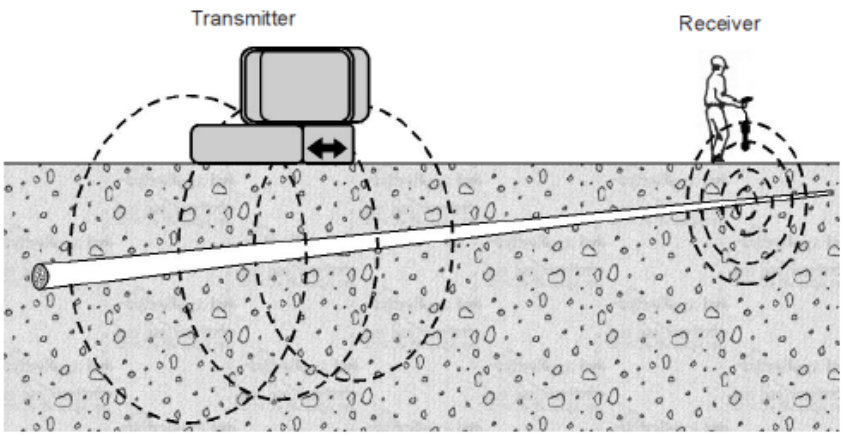

Figure #5

Illustration of the use of the inductive mode with transmitter located over line of interest and line tracing using the receiver.

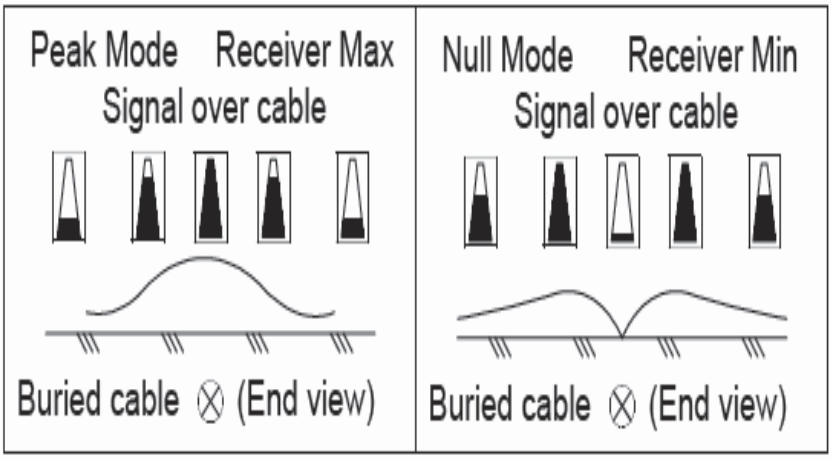

Figure #6

Example of Instrument response using Peak Mode and Null Mode selections.

Figure #7

Typical Transmitting Sondes-
Rycom 815 Hz Fiber Conduit Sonde,
512 Hz Sonde, 815 Hz Sonde and Push-Rod Adaptors

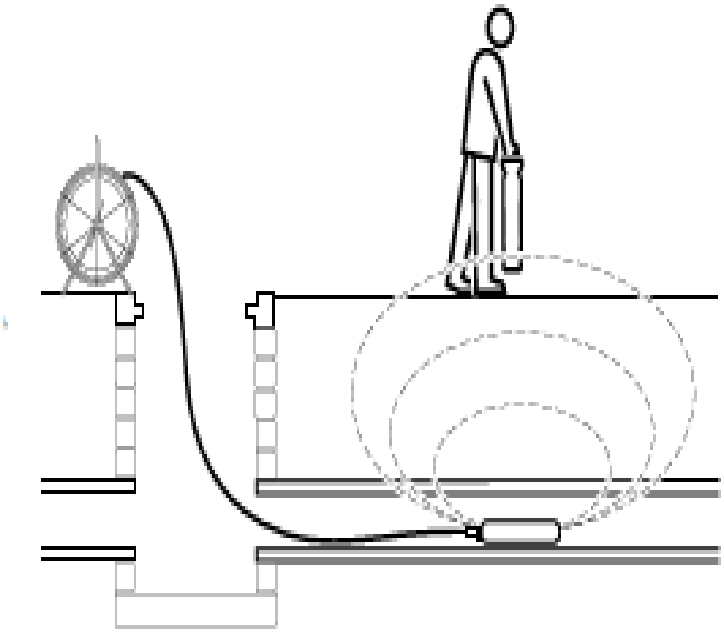

Figure #8

Illustration of signal transmission and line tracing using a sonde.

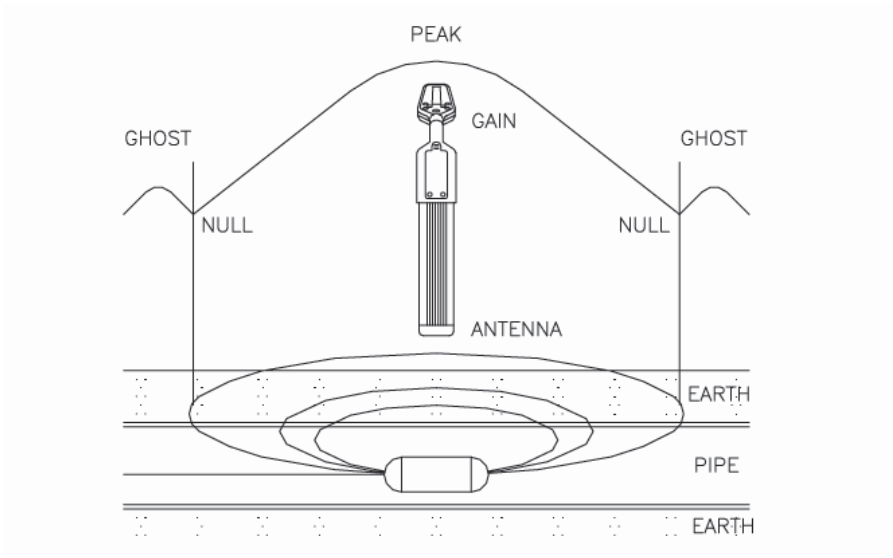

Figure #9

Illustration of signal transmission and line tracing using a sonde

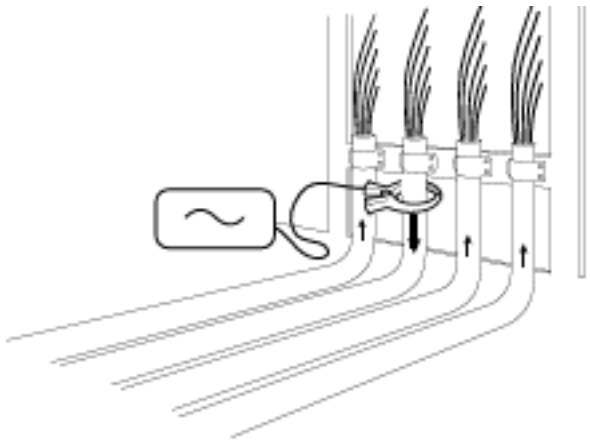

Figure #10

Illustration of the use of the transmitter clamped signal transmission method.

Figure #11

Illustration of a typical transmitter clamp.

F-30

Ground Penetrating Radar

ARCADIS
Infrastructure, environment, facilities

Imagine the result

Ground Penetrating Radar

Rev. #: 02

Rev Date: May 2009

I. Scope and Application

This SOP document outlines the applications, limitations, and methodology for acquiring and interpreting subsurface data using ground penetrating radar (GPR). GPR is a non-invasive and non-destructive tool that detects electromagnetic responses to high frequency radio waves transmitted by the GPR unit as it is pulled along the surface. Subsurface objects or material contacts can be located based on differences in their dielectric potential and/or electrical resistivity. The two most important constraints of any GPR investigation are depth of penetration and required resolution. These two constraints are inversely related to the signal frequency applied; i.e., a higher frequency will yield better resolution, but less penetration and a lower frequency will yield less resolution and deeper penetration.

II. Personnel Qualifications

GPR investigations should be conducted by qualified and experienced operators, such as an experienced field technician and/or geophysicist. The GPR operator should be experienced in evaluating data quality in the field and be able to adjust data acquisition procedures in response to variable site conditions in order to identify anomalies and resolve target features. Inexperienced ARCADIS personnel directing or supervising GPR data acquisition, or interpreting processed GPR data should seek appropriate guidance and technical peer review from qualified and experienced personnel.

III. Equipment List

The following equipment will be available, as required, during GPR surveys.

- Personal protective equipment (PPE), as required in the site Health and Safety Plan (HASP);
- Appropriate forms, Site plans, field notebook, spray paint and camera;
- GSSI Model SIR-3000 radar instrument (or equivalent);
- a primary and, preferably, a secondary antennae of appropriate signal frequency[1] to match anticipated size and depth of targets;
- Non-conductive measuring tape or measuring wheel; and

---

[1] In general, the typical maximum depth of penetration varies from 9 feet with a 400 MHz antennae to 25 feet with a 200 MHz antennae.

- Connecting cables and 12-volt power source.

IV. Cautions

The effectiveness of GPR is site-specific and subject to the skill level of the operator. Reliability and efficiency is enhanced when used in conjunction with other geophysical methods. Soils with higher electrical conductivity rapidly attenuate the radar energy, reducing the penetration depth and resolution. Clayey soils and saturated soils, particularly when high in soluble salts, limit the usefulness of GPR. Other potential interference sources include subsurface debris, rebar reinforced concrete, above ground reflective objects (cars, surface water, transmission lines), and electromagnetic generating apparatus (electrical generators, radio transmitters).

Both metallic and nonmetallic utilities may be imaged by GPR. However, it should be noted that due to differences in the properties of materials, locating a plastic pipe may be more problematic than a metallic pipe because of a lesser dielectric contrast between plastic and soil. A guideline for effective locating depth for utilities is 1 inch (2.5 cm) diameter of utility can be discerned for each foot (0.3 m) of depth to a depth of 12 feet (3.7 m). For instance, one may expect to resolve a utility 10 inches (25 cm) in diameter at a depth of 10 feet (3 m). This is a general rule of thumb that can be applied to both metallic and non-metallic utilities, but should be used cautiously as the type of material can affect the resolution.

Also, the presence of reinforcing bar (rebar) in concrete can limit the resolution of pipes present below the concrete. The resolution of smaller diameter pipes present within or just below the concrete may be completed masked by the high response caused by the rebar.

V. Health and Safety Considerations

Minimize physical hazard exposure through use of proper PPE as prescribed in the HASP. Maintain awareness of other potential hazards associated with the physical location where the GPR investigation is being conducted and any ingress or egress conditions.

VI. Procedure

1. Become familiar with the details of the applicability and limitations of GPR.

2. Evaluate site-specific soil information to determine suitability of soils (clay content, saturation) for GPR. In general, soils with greater than 35% clay content are considered restrictive, and soils with less than 10% clay content are considered favorable for deep penetration with GPR.

3. Evaluate meteorological information regarding recent or forecasted precipitation that could impact soil moisture content and GPR effectiveness. Schedule GPR surveys appropriately.

4. Perform site reconnaissance in advance to identify potential sources of surface interference such as reinforced concrete, large metal objects, or electrical generators).

5. Consider complimentary technologies to supplement GPR and provide multiple lines of evidence. Technologies may include radio frequency, magnetic, and/or electromagnetic surveys.

6. Employ only qualified and experienced GPR operators. For utility locating and mapping applications, the GPR operator should be specifically experienced in evaluating data quality and identifying anomalies in the field requiring variations in data acquisition procedures to positively interpret and locate targets of concern.

7. Consider the depth and size of subsurface features that GPR will be used for identification. Attempt to match the signal frequency to the expected depth and size of the subsurface feature. Change antennae as necessary for variable depths and sizes of target objects. Consider the selection of a primary and secondary choice of antennae, and use multiple antennae as necessary. Evaluate GPR for known utility locations and/or relative to EM results, as an indication of potential effectiveness. A guideline for effective locating depths for utilities is 1-inch (2.5 cm) diameter of utility can be discerned for each foot (0.3 m) of depth to a depth of 12 feet (3.7 m). Expect a much coarser resolution below 12 feet.

8. Establish a reference grid over the area to be investigated and identify traverse locations in the field notebook or on a site plan map.

9. Select and input a dielectric constant into the GPR unit based on knowledge of the type of subsurface materials. Bear in mind that the dielectric constant is an approximation based on assumed subsurface materials and may vary based on the variability of the subsurface materials. The dielectric constant is necessary to estimate the depth of a target, but should be considered an approximation not an absolute. Multiple passes over a known utility may be necessary using different dielectric constants before an accurate depth to a target can be estimated.

10. The pace at which the GPR unit is moved along a traverse affects the target resolution. It is recommended that an initial starting pace should be

approximately 1.5 feet (0.5m) per second and modified if necessary during field operations. Appropriate pacing can be determined in advance if the size of the smallest target is known.

11. Record GPR data while slowly pulling the antenna along each survey traverse. Annotate the record at even distance increments (10 feet, or as needed) using the antenna's marker switch.

12. Multiple traverses in opposite directions over the area being scanned are recommended. A difference in data output for passes conducted in opposing directions may warrant a third pass. This is not necessarily reflective of poor data, but may indicate that anomalies observed are dipping at some angle from horizontal with the ground surface.

13. The width of a single GPR profile scan is actually somewhat broader than that of the antennae itself; however, it should be conservatively assumed that the scan width corresponds to the width of the antennae.

VII. Waste Management

GPR is a non-invasive procedure and should not result in the generation of derived wastes. Any trash or rubbish generated during the course of field activities should be disposed of in a proper trash receptacle.

VIII. Data Recording and Management

Conduct data processing and analysis in accordance with the manufacturer's recommendations and industry practice. Processed data is available in electronic form and as a paper printout. A copy of the field printout should be included in the project files along with the field notebook. Electronic data (raw and processed) should be maintained in accordance with data management procedures as outlined in the project sampling analysis plan (SAP), quality assurance project plan (QAPP), data quality objectives plan, or other applicable plan or guidance document.

IX. Quality Assurance

The following quality control procedures should be observed:

- Seek appropriate input prior to conducting a GPR survey to identify site-specific features (soil conditions/sources of interference) that may impact data acquisition.

- Operate all equipment in accordance with manufacturer's instructions and recommended procedures. Record all system components (Unit, antennae frequency, etc.) information in the field book.

- Data quality should be checked in the field to identify anomalies that may require adjustment to the data acquisition procedures. Make appropriate adjustments to data acquisition methods to achieve survey objectives, as feasible.

- It is recommended that the operation and performance of the GPR equipment is field checked (if possible) by locating existing underground utilities or structures of known depth, size, and construction. These characteristics should be similar to that of unidentified target objects.

- Data interpretation should undergo peer review by appropriate qualified and experienced personnel.

X. References

US Army Corps of Engineers, 1995. Geophysical Exploration for Engineering and Environmental Investigations, Engineering Manual (EM) 1110-1-1802.

F-31

Hazardous Weather Procedures

ARCADIS
Infrastructure, environment, facilities

Imagine the result

Hazardous Weather Procedures

Rev. #: 01

Rev Date: March 16, 2009

I. Scope and Application

This document describes procedures for recognizing and avoiding hazardous weather, and outlines appropriate actions to take if caught in hazardous weather. For the purposes of this SOP hazardous weather will be categorized into the following: 1) Thunderstorms (to include lightning, tornadoes and hail), 2) Flash Flooding, 3) High Winds, 4) Winter Weather, and 5) Heat. This SOP is designed as a supplement to policies and procedures outlined in the ARCADIS Employee Field Health and Safety Handbook and the site-specific Health and Safety Plans. An extensive Hazardous Weather Toolkit is available on the meteorology sub discipline page at http://thesource/env/SER/SI/Pages/Meteorology.aspx.

II. Personnel Qualifications

No special training in meteorology is required to implement these procedures. A variety of tools are available that when properly applied and combined with common sense can prevent loss/injury and save lives. This SOP assumes that ARCADIS field sampling personnel will be versed in the relevant SOPs and be familiar with the applicable site Health and Safety Plan.

III. Equipment List

The following list of materials and devices are appropriate for monitoring the occurrence and/or approach of hazardous weather:

- NOAA Weather radio
- AM Radio
- Cellular telephone
- Laptop computer with internet access
- Hand-held lightning detector (optional)

IV. Cautions

Avoidance is the best approach to dealing with hazardous weather. As such, field crews and project managers should obtain an updated weather forecast for their respective projects each day prior to beginning work. The local television station website is a good source for local/area forecasts. Alternatively, you can go to the

Accuweather website at http://www.accuweather.com/ and enter the town and state in the box at the upper left of the page.

Be familiar with the terms "Watch" and "Warning". A Watch means that conditions are favorable for the formation of severe weather. A Warning means that the severe condition is either verified as occurring or is believed to be occurring. A Warning is cause for immediate action to protect life and property.

V. Health and Safety Considerations

- Refer to the project Health and Safety Plan for any site-specific procedures or instructions for responding to hazardous weather conditions. Generalized procedures can be found in the ARCADIS Employee Field Health and Safety Handbook.

- ARCADIS has implemented a severe/hazardous weather alerting program that can alert field crews, via cell phone text message, of the occurrence and approach of severe weather. Contact a member of the meteorology sub discipline to have this activated for your projects. For locations that do not have cell phone coverage, hand-held lightning detectors can be used, but have limitations. Contact a member of the meteorology sub discipline for guidance.

VI. Procedure

Project managers should monitor weather conditions for their respective project sites if the potential exists for hazardous conditions to occur. The local television stations weather page is an excellent source for weather radar and up to date local forecasts. If a more detailed monitoring is required, contact a member of the meteorology sub discipline for assistance. The following steps will be followed as outlined for each respective scenario:

THUNDERSTORMS

The hazards associated with thunderstorms include lightning, tornadoes, high winds, flash flooding, and hail. A thorough discussion of thunderstorm safety can be found at http://www.weather.gov/om/brochures/ttl.pdf. Although high winds and flash flooding can occur during thunderstorms, these phenomena are discussed separately. Additionally, cloud-to-ground lightning strikes can start brush/forest fires. Fires are not discussed in this SOP, but field crews should be mindful of this potential when working at remote locations during dry periods.

1. Lightning:

Thunderstorms can form very quickly and begin producing lightning. The hazards associated with lightning include the electric charge and extreme heat. The air near a lightning strike is heated to 50,000 °F.

Bursts of static or crackling on an AM radio can alert you that lightning is near. Watch for towering clouds that may begin to flatten out on top (have an anvil appearance). If you can see lightning or hear thunder, fieldwork will be suspended. An exception to this rule would be if thunderstorms are observed to be clearly a great distance away (ten miles or more), or if you can count to greater than 30 before hearing thunder. Fieldwork can be resumed after 30 minutes have elapsed since thunder was last heard. Field crews working on the water or at remote locations must consider the additional time necessary to reach shore/shelter if thunderstorms approach.

Shelter should be sought in a sturdy building during a thunderstorm. Avoid open, pavilion type structures. Automobiles with a solid top and the windows rolled up offer significant protection from lightning. Avoid touching metal while inside the vehicle.

If caught in the open and unable to reach shelter, find a low spot away from trees, fences and poles, making sure the area is not prone to flooding. If in the woods take shelter away from tall trees and do not lean against/touch trees. Lightning tends to strike the tallest object, but not always. Do not hold onto metal equipment or use a cellular phone or 2-way radio. If you feel your skin tingle or your hair stand on end, immediately squat low to the ground on the balls of your feet with your heels touching. Place your elbows on your knees with your head between them. If in a boat and unable to get to shore, take shelter below deck. If in an open boat crouch low as described above.

2. Tornadoes:

Tornadoes are commonly associated with severe thunderstorms. A tornado is a violently rotating column of air that can rotate at speeds in excess of 250 miles per hour. Tornadoes may remain stationary over a given location, but generally travel along the ground at 30 to 70 mph.

If you see a tornado approach or a Tornado Warning is issued, immediately seek shelter in a reinforced building. If the building has a basement take shelter there, otherwise seek shelter in an interior room on the lowest floor of the building. Automobiles are not a safe place to be during a tornado. If you are driving during a tornado you should consider abandoning your vehicle if you can quickly take shelter in a strong building. If you are being overtaken by a tornado while driving and there is not time to get to a strong building,

abandon your vehicle and lie flat in the lowest place you can find (such as a culvert or ditch that is not flooded) and cover your head. Likewise if caught outside with no nearby shelter, lie flat in a low area and cover your head.

3. Hail:

Hail is produced by strong updrafts in thunderstorms wherein water droplets are carried upward, freeze and begin to descend. As the small frozen droplets descend they are coated with liquid water, re-entrained into the updrafts and lifted above the freezing level. In strong thunderstorms this cycle can repeat many times resulting in a progressively larger hailstone. Eventually the hailstone is too heavy to be supported by the updraft and falls to earth.

Small, pea-sized hail is not uncommon and has little potential to cause damage or personal injury. Large hailstones the size of golf balls up to softball size can occur in severe thunderstorms. Hailstones of this size can fall at a rate of up to 100 mph and should be treated as an immediate threat to life and property. Work should already have been suspended due to thunderstorms, but if caught unaware by a sudden hailstorm, immediately seek shelter in a sturdy building. If no buildings are nearby, seek shelter in a vehicle and cover your head with your arms.

FLASH FLOODING

A Flash Flood is a rapid rise of water along a stream or low-lying area. Flash floods are the number one cause of death associated with thunderstorms, but can occur during short-duration, heavy rain events without lightning and thunder. Roadways/escape routes may become rapidly inundated during flash floods. Most flash flood fatalities occur at night and most victims are people who become trapped in automobiles. As little as two feet of standing water can float a vehicle. Six inches of fast moving water can knock you off your feet. Additional information on flood safety can be found at http://www.weather.gov/floodsafety/resources/FloodsTheAwesomePower_NSC.pdf.

If you are working at site that has experienced heavy rain, whether thunderstorm related or not, be mindful of rising waters in streams or low-lying areas. Be careful not to stage equipment or Investigation Derived Waste in locations that may become flooded. In general, the following rules apply:

1. Immediately evacuate to higher ground if a Flood Warning is issued for the area.

2. Do not attempt to cross streams or flowing water over ankle deep.

3. Do not attempt to drive over flooded roads where water depth or road stability is not known.

4. Never drive a vehicle through water over 18 inches deep.

5. Immediately evacuate a vehicle stalled by water and seek higher ground.

HIGH WINDS

High winds can occur under a variety of weather conditions. Severe, straight-line winds in excess of 100 mph can occur during severe thunderstorms. Alternatively, strong wind gusts or sustained damaging winds can occur during periods of otherwise "good" weather. Hazards associated with high winds include (but are not limited to): downed trees and power lines, flying projectiles, and damage to equipment and structures. The Site Safety Officer must evaluate conditions and decide whether to suspend work and/or evacuate the site due to high winds. Shelter from high winds should be sought in a sturdy building. Vehicles can provide shelter; however, falling trees can crush a vehicle. If you must take refuge in a vehicle attempt to position the vehicle away from trees and power lines. If power lines fall on your vehicle DO NOT attempt to get out and DO NOT touch any metal. Stay inside the vehicle until appropriate rescue/utility crews arrive.

WINTER WEATHER

The major hazards associated with winter weather are heavy snow, ice, cold, and flooding. Winter flooding is typically caused by heavy rains in combination with sudden snowmelt and/or ice jams. Flooding will not be discussed in this section as the same cautions and procedures as previously described apply. More information on winter weather issues can be found at http://www.weather.gov/om/winterstorm/winterstorms.pdf.

1. Heavy Snow:

Heavy snow can immobilize a region, block highways and disrupt emergency services. The weight of snow can damage structures and bring down trees and power lines. Even relatively light to moderate snowfall can make driving hazardous and this fact must be considered during commutes to and from the office and project sites.

The project Site Safety Officer may decide to suspend work because of snow. Be mindful of road conditions and reduce speed accordingly. If your vehicle becomes trapped in the snow and you are in a populated area, you should cautiously abandon your vehicle and seek shelter. If your vehicle becomes immobilized in a rural, unfamiliar area, do not attempt to abandon the vehicle during the storm as you can easily become disoriented in heavy snow.

2. Ice:

   Sleet and freezing rain are common winter phenomena. Sleet is a small frozen ice pellet (not to be confused with hail). Freezing rain falls as a liquid until it contacts the ground or other surface and freezes on impact. Although sleet can cause slippery driving conditions, freezing rain presents the more serious hazard. Freezing rain can turn roads into a sheet of ice. The weight of accumulated ice can bring down trees and power lines. Project managers should not schedule work if freezing rain is forecast and field work should be suspended if freezing rain occurs. Extreme caution should be exercised if you must drive in freezing rain.

3. Cold:

   Cold temperatures present the risk of frostbite and hypothermia. Field crews should be mindful of forecast temperatures and wind chills prior to beginning work. Refer to your site-specific Health and Safety Plans and the ARCADIS Employee Field Health & Safety Manual for detailed guidance for cold related issues.

HEAT

Substantial treatment of this subject is provided in your site-specific Health and Safety Plans and the ARCADIS Employee Field Health & Safety Manual and will not be repeated here. Heat related illness/injury is a significant threat to ARCADIS field crews. The body's susceptibility to heat-related issues is a function of a variety of meteorological parameters including temperature, humidity, wind speed, and the presence/absence of direct sunlight. In addition, poor air quality is often associated with high heat conditions and can exacerbate respiratory distress.

Field crews should review forecast temperature and humidity conditions prior to beginning work. Local air quality parameters should also be ascertained. Current air quality conditions can be viewed at http://cfpub.epa.gov/airnow/index.cfm?action=airnow.main.

VII. Waste Management

Not applicable to this SOP.

VIII. Data Recording and Management

Weather conditions that result in a suspension of work, personal injury or other loss should be documented to the best of your ability AFTER all other health and safety considerations have been dealt with. Do not linger in a hazardous situation simply to take notes. Record your observations after the situation becomes safe. If weather conditions contribute to a loss or incident, and a more detailed investigation of conditions at the time of the incident/loss is required, contact the meteorology sub discipline.

IX. Quality Assurance

Not required for this SOP.

X. References

United States Department of Commerce, National Oceanic and Atmospheric Administration (NOAA). Thunderstorms, Tornadoes and Lightning, A Preparedness Guide, undated.

United States Department of Commerce, National Oceanic and Atmospheric Administration (NOAA). Winter Storms, the Deceptive Killers, a Preparedness Guide. December 2001.

United States Department of Commerce, National Oceanic and Atmospheric Administration (NOAA). Floods, the Awesome Power. March 2005.

United States Department of Commerce, National Oceanic and Atmospheric Administration (NOAA). Heat Wave: a Major Summer Killer. Informational Pamphlet, undated.

ARCADIS Employee Field Health and Safety Handbook. May 2008.

F-32

Small Volume Injection Test

Imagine the result

Small Volume Injection Test

Rev. #: 01

Rev Date: October 2012

I. Scope and Application

This Small Volume Injection Test Standard Operating Procedure (SOP) is intended to determine, at relatively low effort and cost, whether aquifer permeability will result in low injection rates and critically limit injected fluid-based remedial strategies, and if not what sustainable injection rate can be expected from a well.

II. Personnel Qualifications

ARCADIS Field sampling personnel will have current health and safety training, including 40-hour HAZWOPER training, Department of Transportation (DOT) training, site supervisor training, and site-specific training, as needed. In addition, ARCADIS field sampling personnel will be versed in the relevant SOPs and possess the skills and experience necessary to successfully complete the desired field work.

III. Equipment List

- Potable water supply
- Hose/piping from water supply to injection test tank
- 250 to 500 gallon tank with gate valve on the discharge port
- Elevated platform, truck bed or trailer capable of supporting a full tank (2,000 to 4,000 pounds)
- Low range flow meter **8 to 40 gph (0.13 to 0.67 gpm), Dwyer model VFA-44 (or equivalent)**
- High range flow meter **0.5 to 5 gpm, Dwyer model VFC-141 (or equivalent)**
- Transfer pump
- Rubber connector (i.e., fernco) for connection to wellhead
- Wellhead connection complete with pressure gauge (0 – 5 psi)
- Miscellaneous ball valves and diaphragm valves
- Camlock fittings and/or hose barbs for injection hose connections
- Injection hose
- Water level meter
- Stop watch
- Traffic cones and caution tape
- Electrical cords
- Generator
- Standard PPE for level D work unless otherwise indicated by site conditions

IV. Cautions

Trip hazards associated with hose running from the water supply to the tank and from the tank to the injection well should be noted during the injection. Additionally, any water spilled onto the

ground may result in a slip hazard and should be cleaned up immediately. In the case of tank or hose failure, isolation valves should be utilized to minimize the water discharged, and the area should be closed off until the water is cleaned up and conditions are safe.

V. Health and Safety Considerations

Field activities associated with the injection test procedures will be performed in accordance with a site-specific HASP, a copy of which will be present on site during such activities.

VI. Procedure

Assembly

- Remove injection well plug and allow the water level in the injection well to stabilize before collecting an initial depth to water reading.
- Calculate the volume of headspace in the well column and record in the field book.
- Place the water feed tank in an elevated position on a truck bed or trailer platform. Verify that the load rating of the bed/platform is adequate to hold the tank when filled with water.
- Position the water feed tank as close to the well as possible. Avoid placing the injection hose across high traffic areas to the extent possible. Place high visibility traffic cones around the entire injection test set up to segregate the work area.
- Attach the pre-assembled well head connection to the injection well and secure it as tightly as possible. Connect the tank to the transfer pump, flow totalizer and well head. See Process and Instrumentation Diagram (PID) for suggested injection test set-up.

Injection Test Procedures

- Start the test under gravity feed conditions (bypass the transfer pump) and using the high range flow meter. Open the overflow vent and make sure the overflow tubing is secured so that any overflow from the well is directed to the overflow containment vessel. Open all valves and allow the water to drain at the maximum rate possible under gravity feed.
- Collect flow and totalizer readings every five minutes and frequently check the overflow tubing on the well head for overflowing water which would indicate that the well column is full.
- If the well column fills and overflow is detected at the well head, reduce the flow to the well using the diaphragm valve upstream of the flow totalizer until no overflow is detected.
- If the flow rate drops to less than 0.5 gpm, route the flow through the low range flow meter (see PID).

- If the sustainable flow rate under gravity feed conditions is less than 0.25 gallons per minute (gpm), close the overflow vent and use the transfer pump to add a small amount of pressure to the well head.
- Increase the pressure in increments of one pound per square inch (psi), up to a maximum of three psi. After each step, allow the flow rate to stabilize (approximately 5 minutes) and collect flow readings to the well head.
- Continue the test for a maximum time of one hour or until 100 gallons has been added to the well.

VII. Waste Management

No impacted waste will be generated during this injection test. All water collected in the overflow containment should be potable water and can be discharge in a nearby sewer or grassy area.

VIII. Data Recording and Management

The following data should be collected during the test

- Initial depth to water,
- Volume of headspace in well,
- Initial gravity feed injection rate,
- Total volume of water injected when overflow is first detected,
- Totalizer, flow rate and well head pressure (if applicable) readings at a minimum of every 5 minutes,
- Time and totalizer readings if flow is switched between high range and low range flow totalizer.

IX. Quality Assurance

Any deviations from this SOP should be clearly noted in the field book.

X. References

Water-Level and NAPL Thickness Measurement SOP, Rev. 0, February 27, 2009

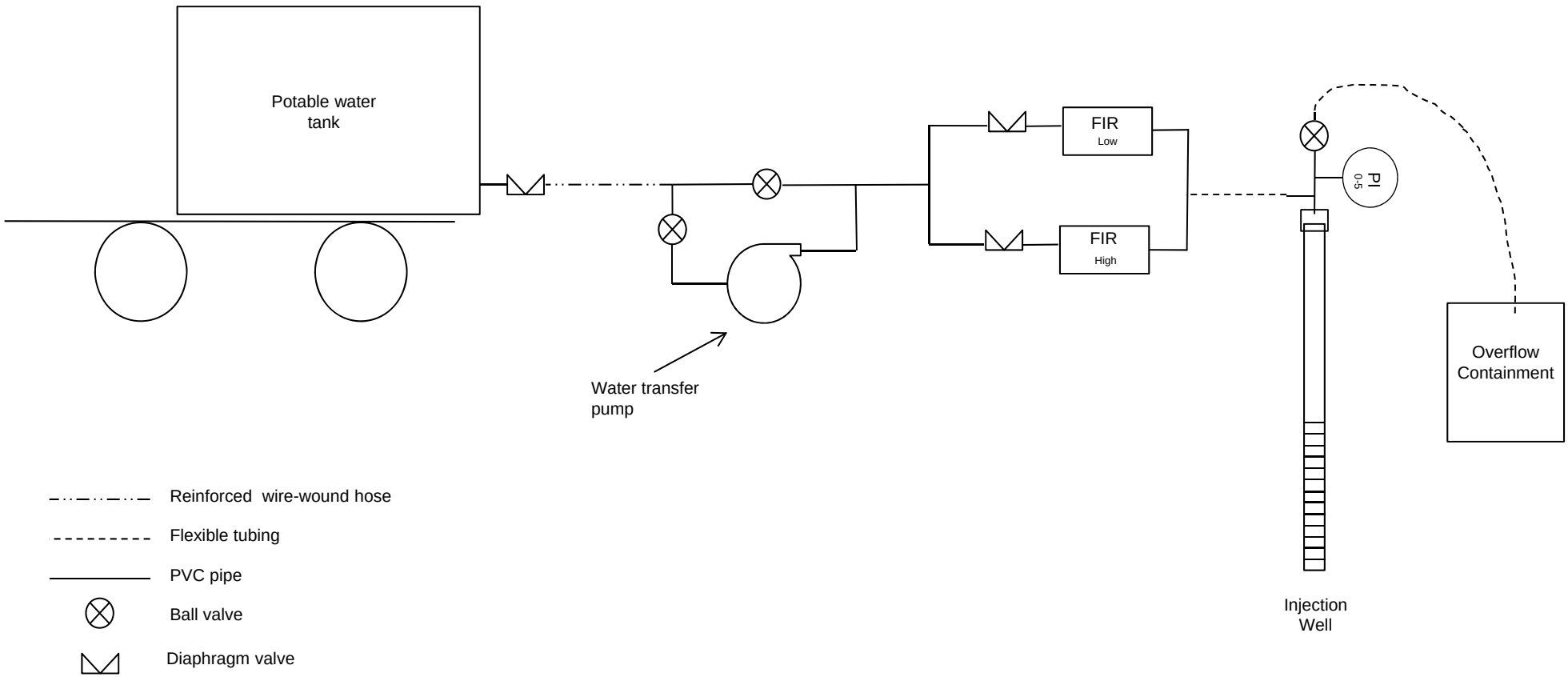

Small Volume Injection Test SOP

Process and Instrumentation Diagram

ARCADIS

FIGURE **1**

Appendix C

Field Forms

ARCADIS BRAGHTY & MILLER

Laboratory Task Order No./P.O. No. _____

CHAIN-OF-CUSTODY RECORD

Page _____ of _____

Project Number/Name _____

Project Location _____

Laboratory _____

Project Manager _____

Sampler(s)/Affiliation _____

ANALYSIS / METHOD / SIZE

Sample ID/Location	Matrix	Date/Time Sampled	Lab ID							Remarks	Total

ARCADIS

Daily Log

Well(s) _____ Project No. 10531001.0001 Page _____ of _____

Site Location Hunter Army Airfield

Prepared by _____

Date/Time	Description of Activities

ARCADIS

Field Instrument Calibration Log

Project Name/Number _____ Date _____

Calibrating Personnel _____ Instrument _____

Time of Initial Calibration _____ Weather _____

Calibrant	Initial Reading	Adjusted Reading	Final Reading	Time	Temperature

ARCADIS

Geoprobe Boring/Well Construction Log

JOB NUMBER	CLIENT	LOCATION	BORING/WELL NO.	PAGE 1 OF _____
10153001	Hunter Army Airfield	Savannah, GA		

DRILLING METHOD: Geoprobe	SAMPLING METHOD:
DRILLING START / FINISH	DEVELOP START: NA / FINISH: NA
STATIC DTW / DTO / TIME / DATE	DRILLED BY
ELEVATION TOC / GL	LOGGED BY

BORING/WELL LOCATION

N

GEOPROBE CONSTRUCTION DETAIL	DEPTH FEET	CLASS	NAME	COLOR	DESCRIPTION: GRADATION, SECONDARY CHARACTERISTICS, ODOR, MOISTURE CONTENT, REMARKS.	SAMPLE ID	SAMPLE DEPTH	PID (ppm)	ANALYSIS	LAB
	1									
	2									
	3									
	4									
	5									
	6									
	7									
	8									
	9									
	10									
	11									
	12									
	13									
	14									
	15									
	16									
	17									
	18									
	19									
	20									

ARCADIS

Geoprobe Boring/Well Construction Log

JOB NUMBER	CLIENT	LOCATION	BORING/WELL NO.	PAGE ____ OF _____	BORING/WELL LOCATION
10153001	Hunter AAF				N

DRILLING METHOD	Geoprobe	SAMPLING METHOD	
DRILLING START		DEVELOP START	NA
FINISH		FINISH	NA
STATIC DTW	TIME	DRILLED BY	
DTO	DATE		
ELEVATION TOC		LOGGED BY	
GL			

GEOPROBE CONSTRUCTION DETAIL	DEPTH FEET	CLASS	NAME	COLOR	DESCRIPTION: GRADATION, SECONDARY CHARACTERISTICS, ODOR, MOISTURE CONTENT, REMARKS.	SAMPLE ID	SAMPLE DEPTH	PID (ppm)	ANALYSIS	LAB
	1									
	2									
	3									
	4									
	5									
	6									
	7									
	8									
	9									
	0									
	1									
	2									
	3									
	4									
	5									
	6									
	7									
	8									
	9									
	0									

ARCADIS

Geoprobe Groundwater Sampling Form

Project No. 10153001 **Boring ID:** **DP-**

Site Location: Hunter Army Airfield Date Sampled

Site Description

Weather

Duplicate/QA/QC:

Purging/Sample Collection Information

Casing Material: St. Steel Geoprobe rods Purge Method:(circle one) Bailer Peristaltic Check Valve

Casing Diameter: Geoprobe rods Sample Method: (circle one) Slotted Rods Retractable Screen

Sample ID Boring ID-GW (depth)	Sample Time	Water Column	Gallons/ Foot	Volume Purged	Turbidity	Color	Odor	Lab	Other

Lab Analysis

Constituents Sampled	Container Description	Preservative

Remarks

Sample Personnel

Purge volume = Water Column (ft) x 0.02

Water Column = Sample Depth - Depth to Water

ARCADIS

Location Sketch

Well(s) _____ Project No. 10153001 Page _____ of _____

Site Location _____

Prepared by _____

(Locate all wells, borings, etc. with reference to three permanent reference points: tape all distances: clearly label all wells, roads, and permanent features)

N

0 ft ft

ARCADIS

Groundwater Sampling Form

Site Location: Hunter AAF Project No. 10153001 **Well ID:** _____

Date: _____ Sampled By: _____

Sampling Time: _____ Recorded By: _____

Weather: _____ Duplicate/QA/QC: _____

Instrument Identification

Instrument:	PID	Water Quality Meter(s)
Serial #:		

Purging Information

Casing Material: _____

Casing Diameter: _____

Total Depth: _____

Depth to Water: _____

Water Column: _____

Gallons/Foot: _____

Gallons in Well: _____

Purge Method:(circle one) Submersible Centrifugal Bladder Bailer Peristalt

Screen Interval: From: _____ To: _____

Pump Intake Setting: _____

Volumes to be Purged: _____

Total Volume Purged: _____ _____

Pump On: _____ Off: _____

Field Parameter Measurements During Purging

Time	Minutes Elapsed	Rate (gpm or ml)	Volume Purged	Depth to Water	Turbidity (NTUs)	pH (SI Units)	Conductivity (µmhos/cm)	Temp (ºC or ºF)	Diss. Oxygen	Comments

Observations During Sampling

Well Condition: _____ Purge Water Disposal: _____

Color: _____ Turbidity(qualitative): _____

Odor: _____ Other (OVA, HNU,etc.): _____

Constituents Sampled	Container Description: From Lab _____ ARCADIS _____	Preservative

Boring/Casing Volumes

2" = 0.16 4" = 0.65

ARCADIS
CALIBRATION FORM
PHOTOIONIZATION DETECTOR

Project: **Hunter Army Airfield**

Location: _____

PID Model: **Multi Rae**

Pre-Use Calibration

Date:_____ Time:_____am/pm

5 minute (minimum) warm up in ambient air: YES ☐ NO ☐

Battery indicator reading (e.g., 10 through +20): _____

Instrument zeroed (ambient air): YES ☐ NO ☐

Span gas pressure (e.g., 30 psi minimum to 300 psi):

Calibration gas used is 100 ppm Isobutylene/air: YES ☐ NO ☐

Benzene Referenced: YES ☐ NO ☐

Calibration Value: _____

Post-Use Calibration

Date:_____ Time:_____am/pm

Ambient air reading (e.g., 0 ppm): _____ppm

Battery indicator reading (e.g., 10 through +20): _____

Calibration Value: _____

Comments and description of work activities performed during monitoring:

_____

_____

_____

Calibrated by:_____

Sample Key

ARCADIS Project Number: 10153001

Project Name: Hunter Army Airfield

Sampler:

Laboratory:

				Analysis/Parameters																					
				Lab														Field							
Sample ID	**Location ID**	**Collection Date (mm/dd/yy)**	**Collection Time (hr:min)**	***TOC (9060)***	***Aluminum (6010B)***	***Metals (App IX) (6010B)***	***SVOCs (8270C)***	***VOCs (8260B)***	***Alkalinity (310.1)***	***Pesticides (8081A)***	***Hex Chrome (7196A)***	***Total Iron (6010)***	***Carbon Dioxide (AM20G)***	***Sulfate (9056)***	***Nitrate and Nitrite (9056)***	***Chlorides (9056)***	***Methane, Ethane, and Ethene (AM20G)***	***pH***	***DO,ORP,temp., turbidity, conductivity***	**Sample Type**	**Matrix Code**	**Location Description**	**Chain of Custody**	**Parent Sample ID**	**Comment**

( ) = Enter the collection date within the parenthesis (ie. 011904)

* If more than one TB is colleced in one day then name the Trip Blanks sequentially (ie. TB1( ), TB2( ), etc.)

**The time on the COC needs to be the same for MS/MSD as the parent sample.

SOIL SAMPLING SUMMARY

ARCADIS Project Number: 10153001							
Project Name: Hunter Army Airfield							
Sampler:							
Laboratory:							
Sample ID	*Location ID*	*Collection Date (mm/dd/yy)*	*Collection Time (hr.min)*	*Estimated Ground Elevation (ft. AMSL)*	*Sample Start Depth (ft bgs)*	*Sample End Depth (ft bgs)*	*Comment*

Note: Sample ID = Location ID(Sample Start Depth-Sample End Depth)

PIKA-ARCADIS JV

Soil/Sediment Sample Log

Project/Site Location: Hunter Army Airfield Project No.: 10153001

Sample No. _____ Duplicate/QA/QC _____

Date _____ Weather _____

Site Description _____

Sampling Method and Material: Geoprobe MacroCore with liner, stainless steel sampling spoon

Sample ID Boring ID-SO (depth)	Sample Time	Soil Class.	Soil Description (Color, description, moisute, odor, etc.)	PID/FID Reading	Offsite Lab Analysis?

Lab Analysis

Constituents Sampled	Container Description	Preservative

Remarks _____

Sample Personnel _____

ARCADIS

SURFACE WATER SAMPLE LOG

Sample ID _____ Project/No. _____

Date _____ Sampling Personnel _____

Time _____ _____

Weather _____

DESCRIPTION OF SAMPLE LOCATION:

Name of Water Body _____

Depth of Water _____ Velocity _____

Other Comments _____

Substrate Description _____

Location _____

_____

Description of Nearby Vegetation _____

FIELD PARAMETERS:

Sample Method _____

Sample Description _____

_____

Temperature (°C/°F) _____ pH _____

Dissolved Oxygen _____ SC _____

Salinity _____

CONTAINER DESCRIPTION: From _____ Lab _____

Bottle Type	Analysis	Preservative

SAMPLING LOCATION SURVEY SUMMARY

ARCADIS Project Number: 10153001			*Ground Elevation (ft. AMSL)*	*Top of Casing Elevation*		*Depth-to-Water Reference Elevation (ft. AMSL)*	*Comment*
Project Name: Hunter Army Airfield				*Inner (ft. AMSL)*	*Protective/Outer (ft. AMSL)*		
Sampler:							
Laboratory:							
Location	*Easting**	*Northing**					

* - Please provide reference for the coordinate system used.

PIKA-ARCADIS JV

Well Construction Log

(Unconsolidated)

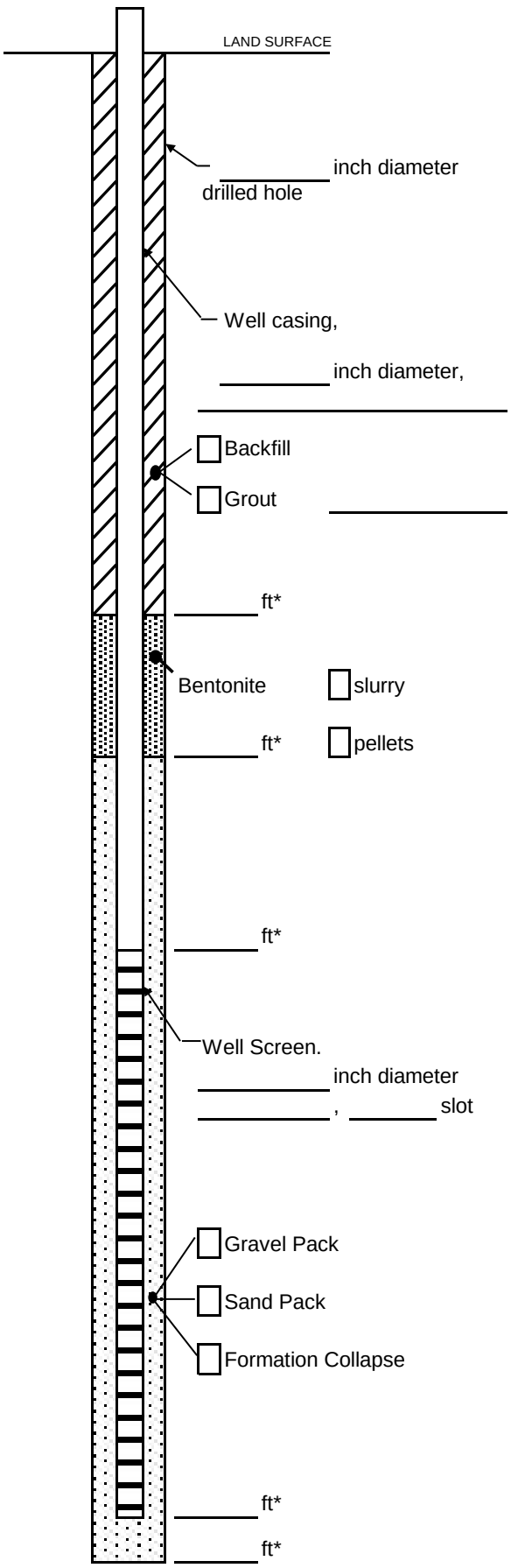

Measuring Point is
Top of Well Casing
Unless Otherwise Noted.

* Depth Below Land Surface

Project 10153001 Well _____

Town/City _____

County _____ State GA

Permit No. _____

Land-Surface (LS) Elevation and Datum:

_____ feet ☐ Surveyed

☐ Estimated

Installation Date(s) _____

Drilling Method _____

Drilling Contractor _____

Drilling Fluid _____

Development Technique(s) and Date(s)

Fluid Loss During Drilling _____ gallons

Water Removed During Development _____ gallons

Static Depth to Water _____ feet below M.P..

Pumping Depth to Water _____ feet below M.P.

Pumping Duration _____ hours

Yield _____ gpm Date _____

Specific Capacity _____ gpm/ft

Well Purpose Monitoring

Remarks _____

Prepared by _____

PIKA-ARCADIS JV

Utilities and Structures Checklist

Project: Hunter Army Airfield

Prepared By: _____

Location: _____

Date: _____

Instructions: This checklist must be completed by an ARCADIS staff member as a safety measure to insure that all underground utility lines, other underground structures, as well as aboveground power lines are clearly marked out in the area selected for boring or excavation. **DRILLING OR EXCAVATION WORK MAY NOT PROCEED UNTIL LINES ARE MARKED AND THIS CHECKLIST HAS BEEN COMPLETED.** Arrangements for underground utility markouts are best made at the time of the preliminary site visit to allow client and/or utility company sufficient time. Keep completed checklist and maps onsite; send copy to Project Manager.

Assignment of Responsibility: ARCADIS is responsible for having underground utilities and structures located and marked. Preferably, the utilities themselves should mark out the lines.

Emergency Procedures: Follow emergency procedures outlined in site-specific Health and Safety Plan.

Utilities and Structures

Type	Not Present	Present	How Marked? (flags, paint, wooden stakes, etc.)
Natural Gas Line			
Electric Power Line			
Telephone Cable			
Sewer Line			
Storm Drain			
Water Line			
Steam Line			
Petroleum Product Lines			
Product Tank			
Septic Tank/Drain Field			
Overhead Power Line			

Name and Affliation of person who marked or cleared underground lines or structures

ORGANIZATION	NAME	PHONE

Comments:

PIKA-ARCADIS JV

Water Level Measurement Form

Project No: 10153001

Location: Hunter Army Airfield

Date: _____

Recorded By: _____

Well Number	Time	TOC Elevation (ft)	Static Depth to Water (ft btoc)	Duplicate Reading (ft btoc)	GW Elevation (ft msl)	Total Depth (ft btoc)	Comments

ft btoc Feet below top of casing.

PIKA-ARCADIS JV

WATER LEVEL/PUMPING TEST RECORD

PROJECT _____ WELL _____ SITE _____

SCREEN SETTING _____ MEASURING POINT DESCRIPTION _____ HEIGHT ABOVE GROUND SURFACE _____

STATIC WATER LEVEL _____ MEASURED WITH _____ DATE/TIME _____

DRAWDOWN _____ START OF TEST _____ PUMPING WELL _____

RECOVERY _____ END OF TEST _____

DISTANCE FROM WELL MEASURED TO PUMPING WELL [r] _____ DISCHARGE RATE _____ ORIFICE _____

DATE & TIME	WELL OR t (mins)	HELD (ft)	WET (ft)	DEPTH TO WATER (ft)	s (ft)	DEW. [1] CORR. (ft)	ART.[2] s' (ft)	Q (gpm)	MANO-METER (in)	REMARKS [3]

1) Dewatering Correction 2) Equivalent Artesian Drawdown 3)pH, Spec. Cond, Temp, Free Product, etc.

PIKA-ARCADIS JV

WATER LEVEL/PUMPING TEST RECORD

PROJECT _____ WELL _____ SITE _____

DATE & TIME	WELL OR t (mins)	HELD (ft)	WET (ft)	DEPTH TO WATER (ft)	s (ft)	DEW. [1] CORR. (ft)	ART.[2] s' (ft)	Q (gpm)	MANO-METER (in)	REMARKS [3]

PIKA-ARCADIS JV **WELL CONSTRUCTION LOG- TELESCOPING**

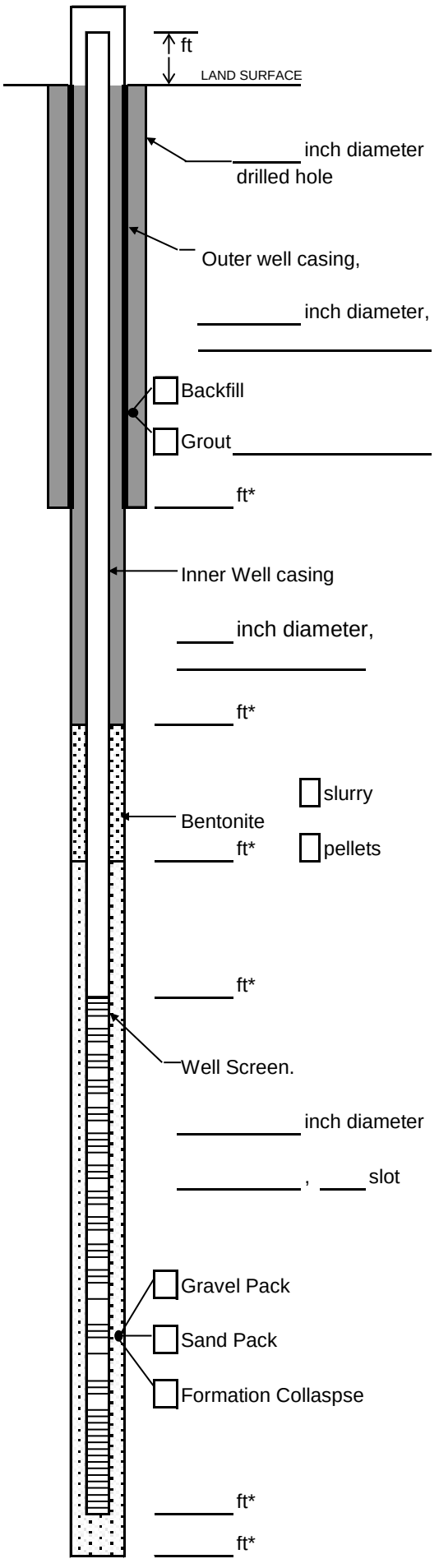

Measuring Point is
Top of Well Casing
Unless Otherwise Noted.

* Depth Below Land Surface

Project _____ Well _____

Town/City _____

County _____ State _____

Permit No. _____

Land-Surface Elevation and Datum:

_____ feet ☐ Surveyed

☐ Estimated

Installation Date(s) _____

Drilling Method _____

Drilling Contractor _____

Drilling Fluid _____

Development Technique(s) and Date(s)

Fluid Loss During Drilling _____ gallons

Water Removed During Development _____ gallons

Static Depth to Water _____ feet below M.P.

Pumping Depth to Water _____ feet below M.P.

Pumping Duration _____ hours

Yield _____ gpm Date _____

Specific Capacity _____ gpm/ft

Well Purpose _____

Remarks _____

Prepared by _____

PIKA-ARCADIS JV **WELL CONSTRUCTION LOG- BEDROCK**

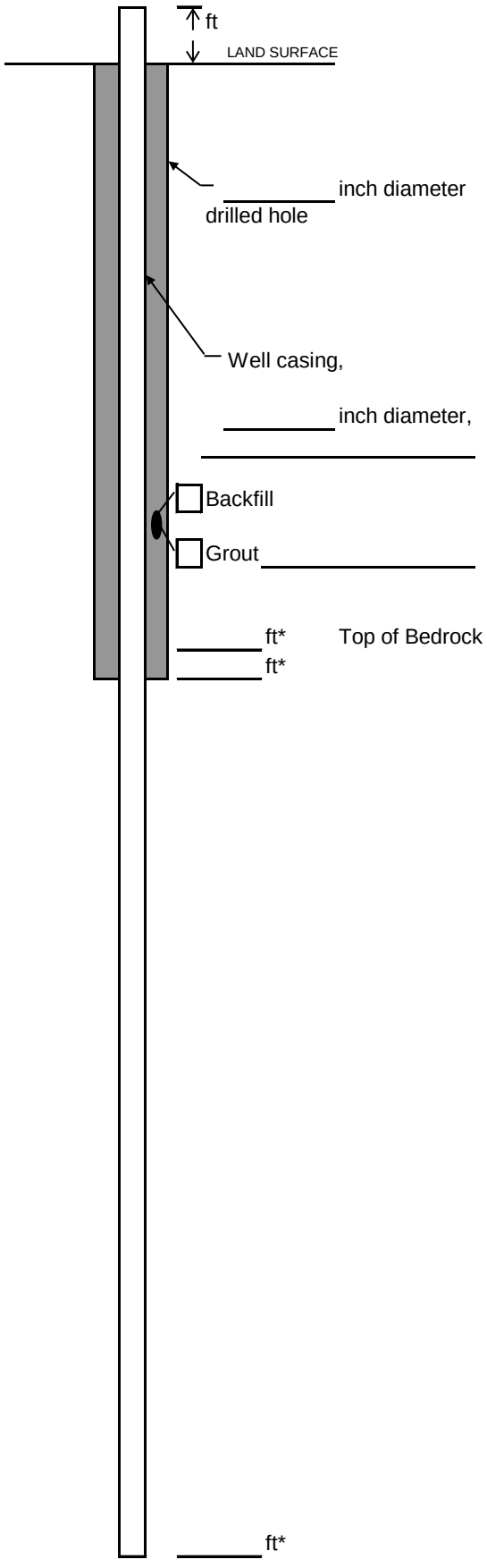

Measuring Point is
Top of Well Casing
Unless Otherwise Noted.

* Depth Below Land Surface

Project _____ Well _____

Town/City _____

County _____ State _____

Permit No. _____

Land-Surface Elevation and Datum:

_____ feet ☐ Surveyed

☐ Estimated

Installation Date(s) _____

Drilling Method _____

Drilling Contractor _____

Drilling Fluid _____

Development Technique(s) and Date(s)

Fluid Loss During Drilling _____ gallons

Water Removed During Development _____ gallons

Static Depth to Water _____ feet below M.P.

Pumping Depth to Water _____ feet below M.P.

Pumping Duration _____ hours

Yield _____ gpm Date _____

Specific Capacity _____ gpm/ft

Well Purpose _____

Fracture Zones _____

Remarks _____

Prepared by _____

PIKA-ARCADIS JV
Well Development Form

Page ____ of ____

Project/No. 10153
HAAF

Well ID _____

Date _____

Screened Interval _____

Measuring Point Description _____

Well Materials: ____ PVC ____ St. Steel

Static Water Level _____

Casing Diameter (in) _____

Pump On _____

Pump Off _____

Total depth _____

Boring Diameter (in) _____

Pump Intake _____

Water Column _____

Development Method:

Volume Purged (g) _____

Gallons Per Foot _____

Centrifugal _____
Submersible _____
Surge Block _____
Bailed _____
Other _____

Development Criteria: X Boring Vol. ____ Casing Vol. X Parameters

Gallons in Casing/Boring _____

Developed By: _____

Time	Minutes Relapsed	Rate (gpm) or (ML)	DTW (ft)	Gallons Purged	pH	Cond. (umhos) (ms/cm)	Turb (NTUs)	Redox (mV)	Diss. O2 (mg/L)	TEMP. (C) or (F)	Remarks

Boring/Casing Volumes
2" = 0.16 3" = 0.37 4" = 0.65 6" = 1.47 8" = 2.61 10 " = 4.08 12" = 5.88

PIKA-ARCADIS JV

Well Gauging/Purging Log

Project No: 10153001

Location: Hunter Army Airfield

Date:

Recorded By:

Well Number	Time	Static Depth to Water (ft btoc)	Depth to Product (ft btoc)	Product Thickness (ft)	Total Depth (ft btoc)	Well Diameter (inches)	Well Volume (gallons)	Purge Volume (gallons)	Remarks

ft btoc Feet below top of casing. 2"= 0.16 3" = 0.37 4" = 0.65 6" = 1.47

WELL SAMPLING SUMMARY

ARCADIS Project Number: 10153001								Final							
Project Name: Hunter Army Airfield															
Sampler:															
Sample ID	Location ID	Collection Date (mm/dd/yy)	Collection Time (hr.min)	Initial Depth to Water (ft btoc)	Well Volume (gallons)	Total Depth (ft)	Total Volume Removed (gallons)	pH	Cond. (umhos)	Temp. (oC)	Turb. (NTU)	ORP	DO	TDS	Comment

( ) = Enter the collection date within the parenthesis (ie. 011904)